PIN	Assignment
1	Y1
2	X1
3	Y2
4	X2

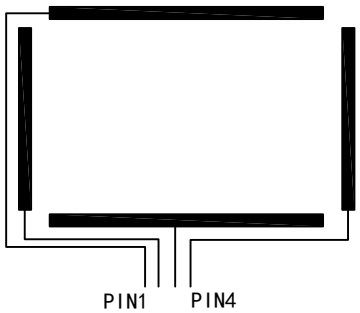

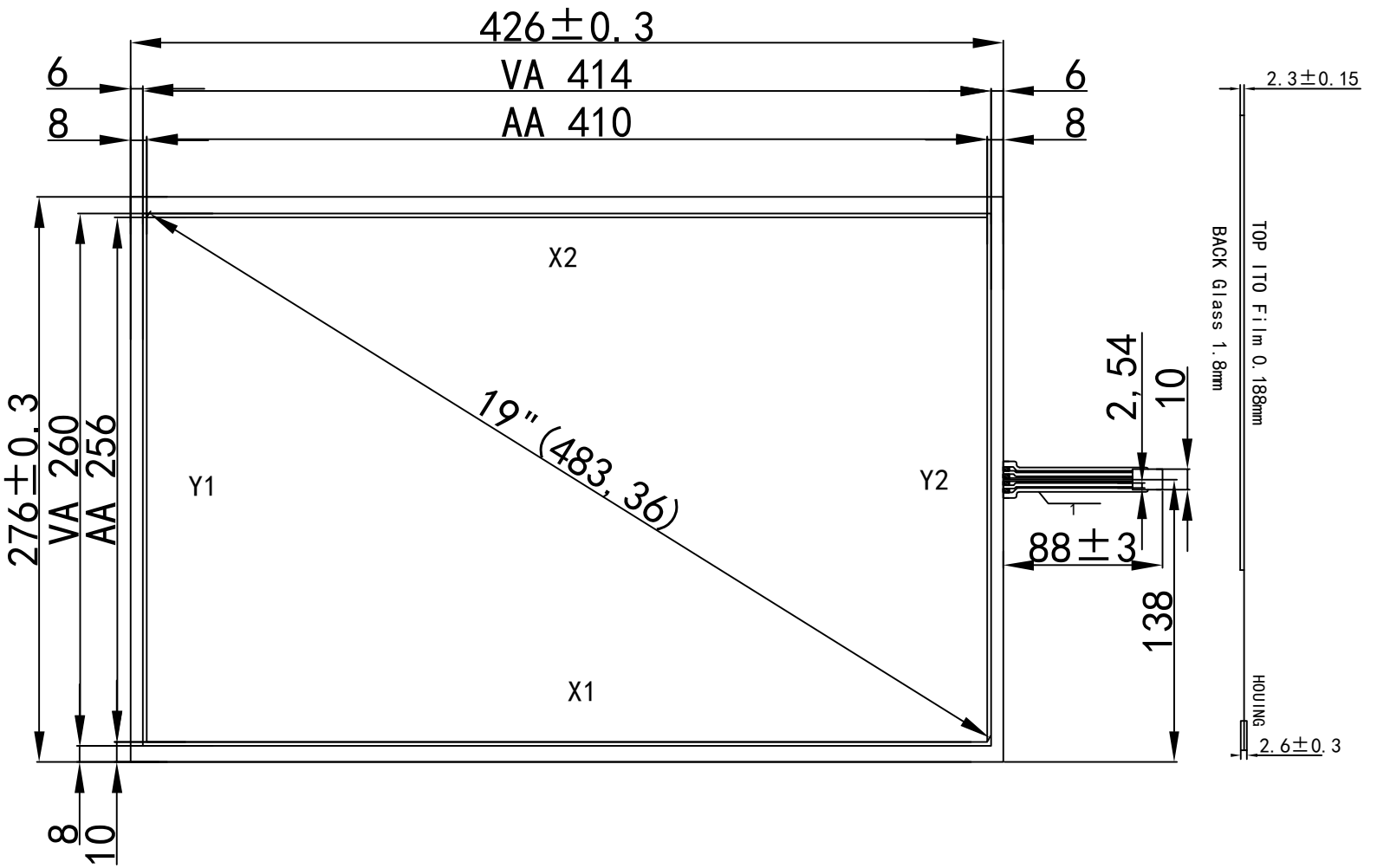

Notes:

1. Type:Film to Glass
2. Operating Voltage:≤10V
3. Operation Temperature:-10℃～60℃ Storage Temperature:-20℃～70℃
4. Life Time: >1, 000, 000 times
5. Connect Material:FPC
6. Response Time:≤10ms
7. Linearity:≤1.5%
8. Transmittance:≥78%
9. Surface Hardness≥3H(pencil)
10. Operation force: 40g～100g
11. Resistance:Y:160Ω-380Ω X:400Ω-800Ω

OBEY CO., LIMITED
WWW.OBTOUCH.COM | WWW.OBEYCROP.COM

MODEL NO.	TS190A4K01	UNIT:	MM
DRAWN:		TOLERANCE:	±0.3
DATE:		SCALE:	1:1
VERSION:	1.0	REV:	19W4KL

Print to PDF without this message by purchasing novaPDF (http://www.novapdf.com/)