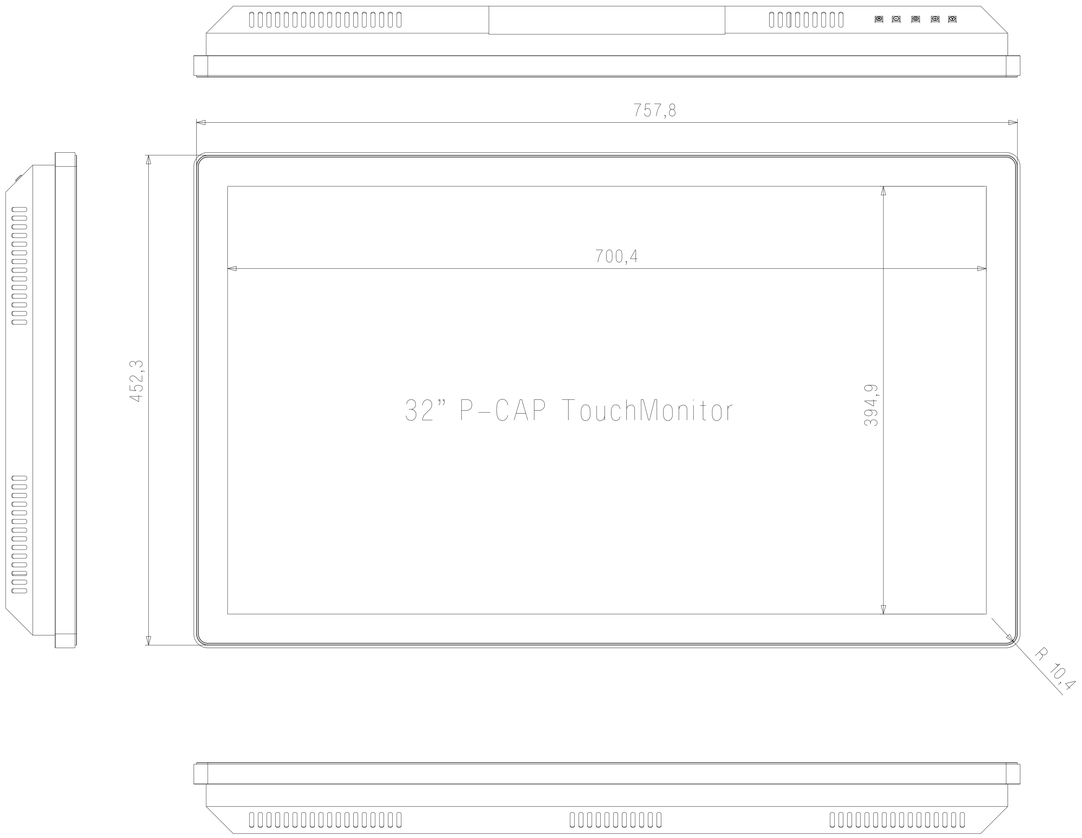

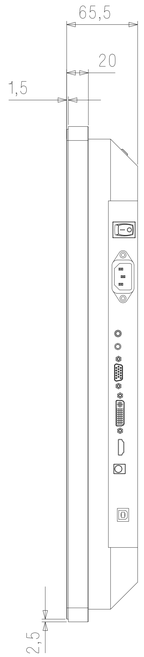

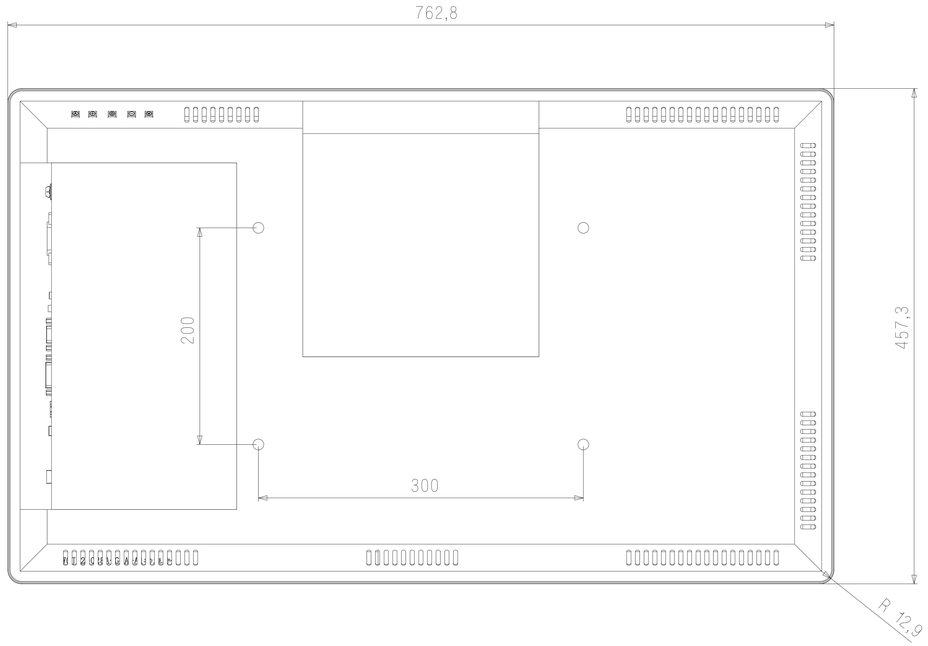

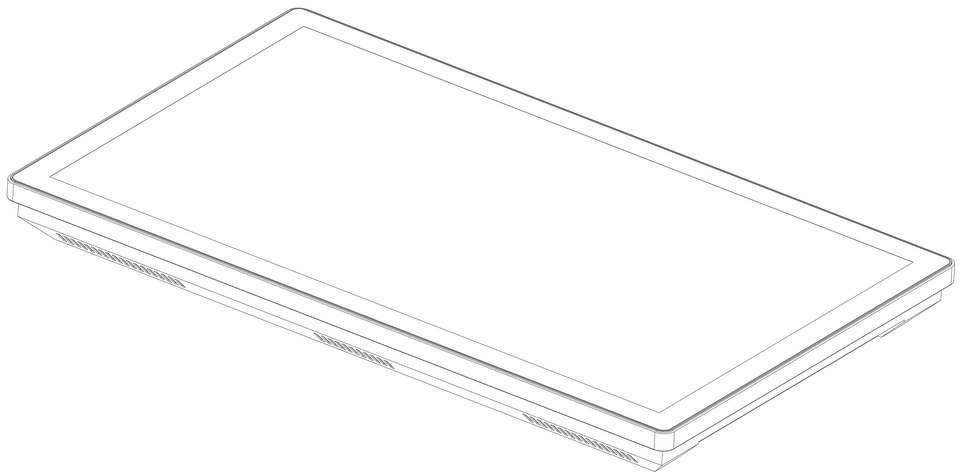

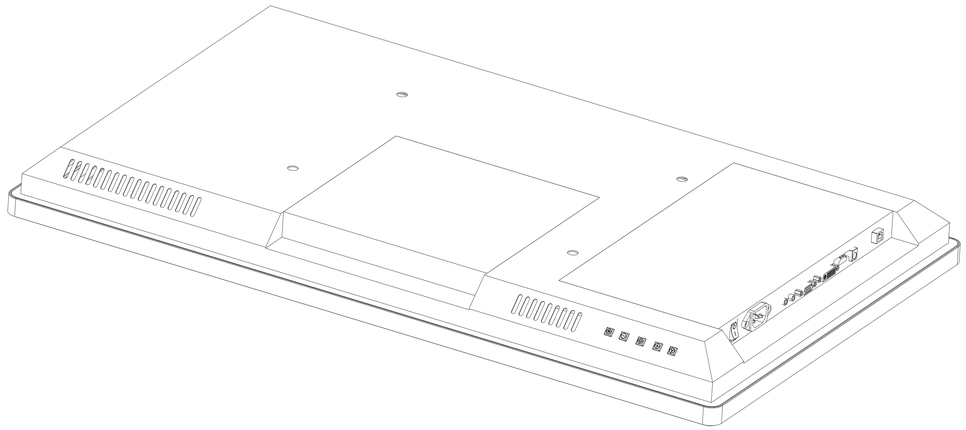

COT320-CFK03-D01

2017-05-04