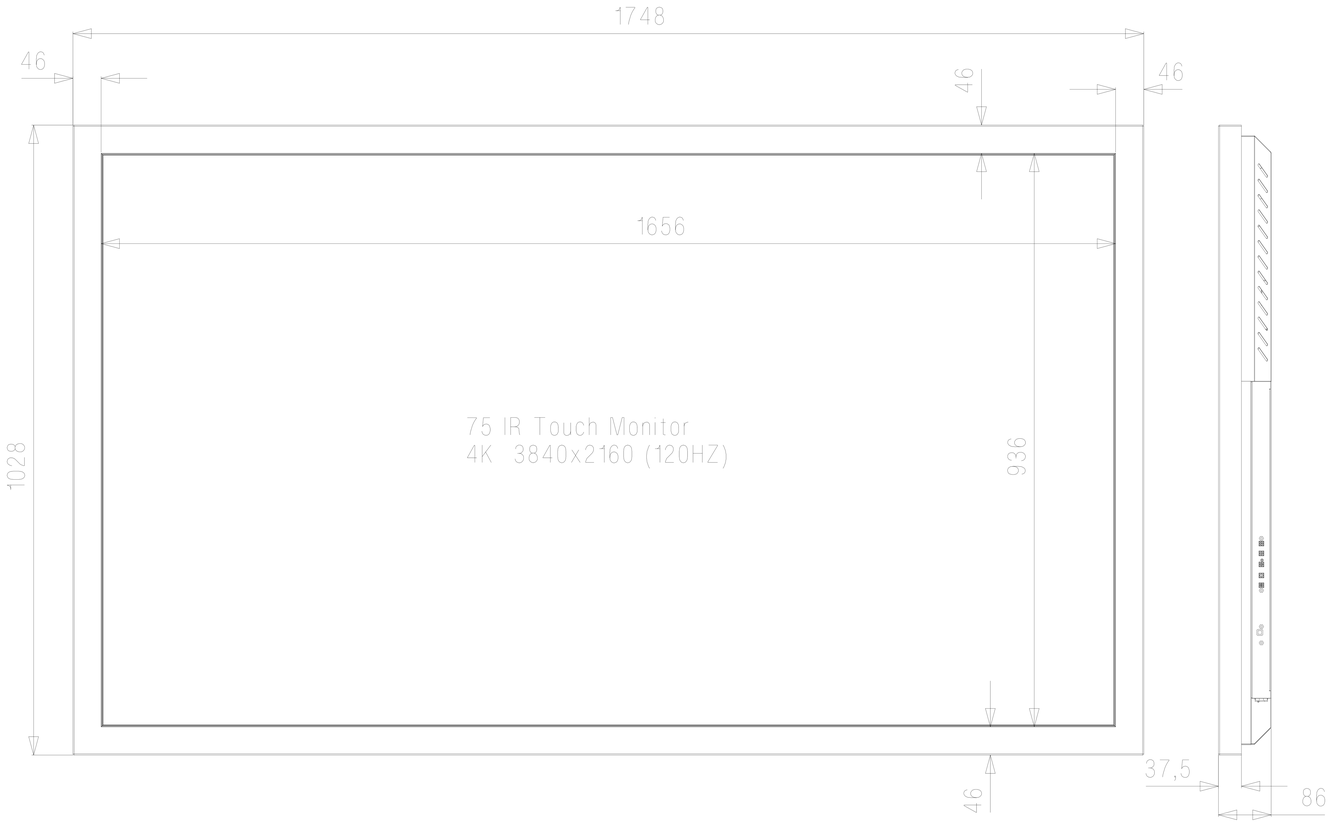

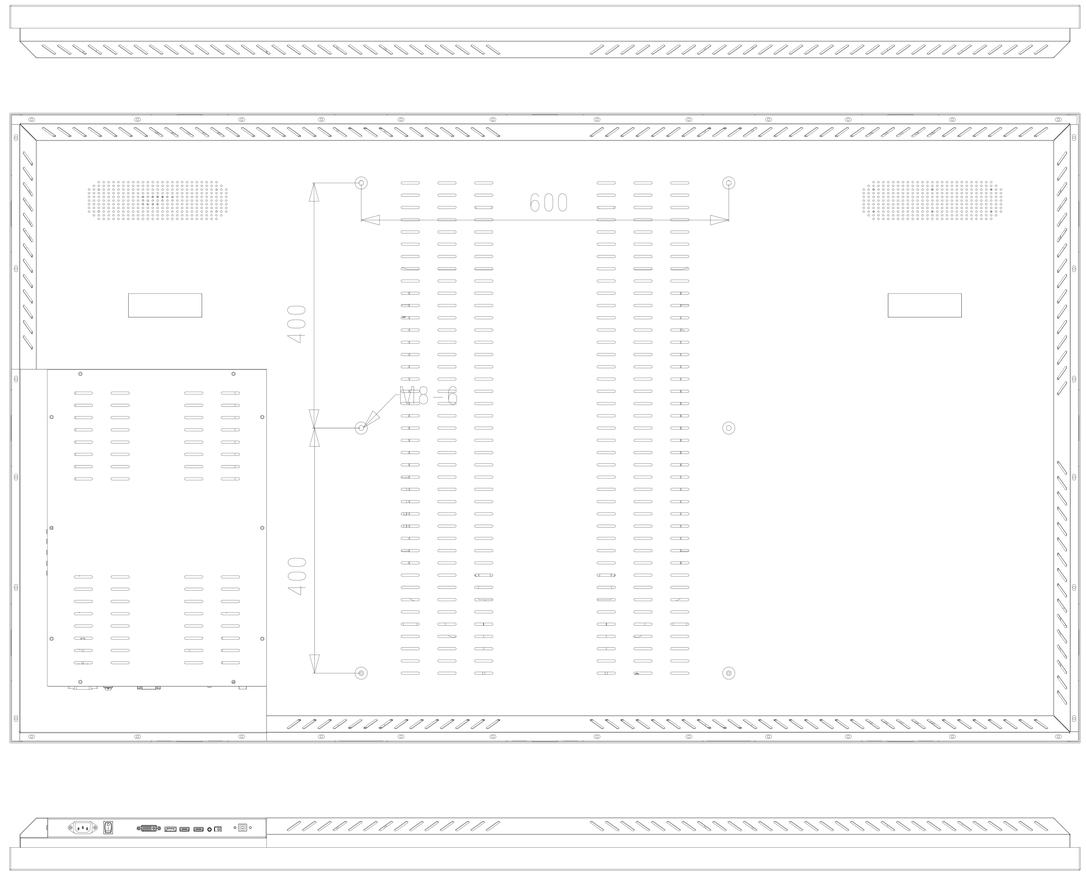

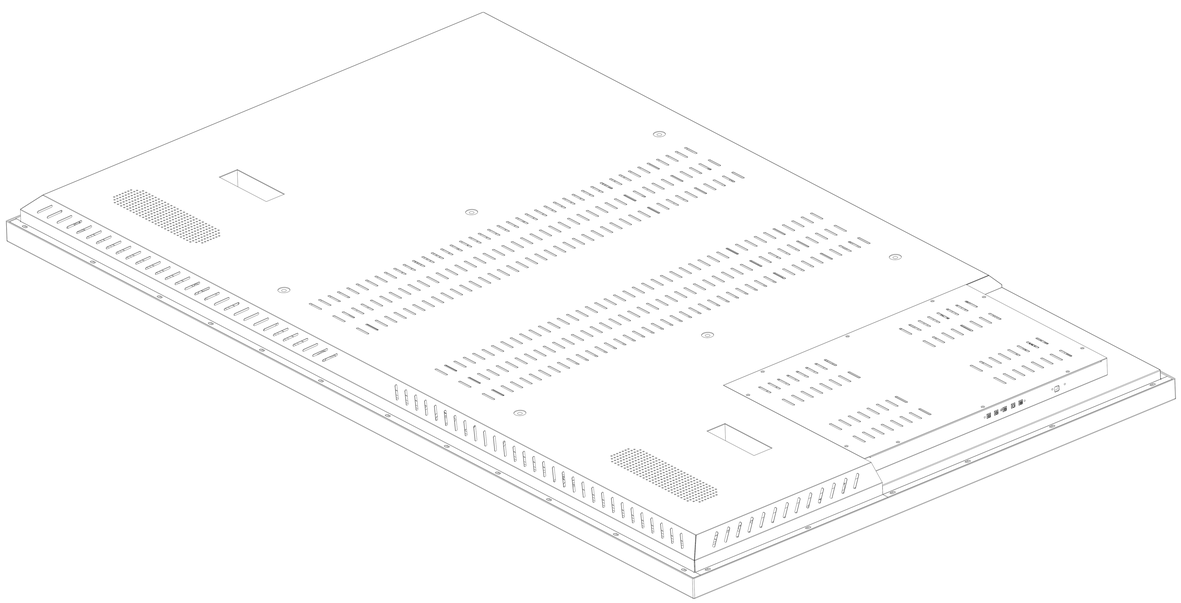

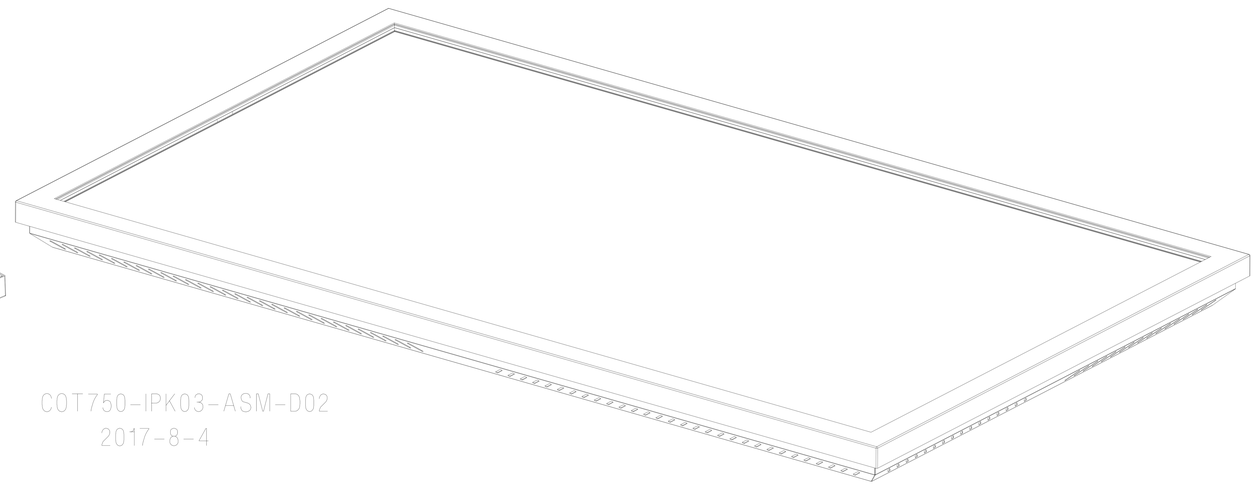

COT750-IPK03-ASM-D02
2017-8-4