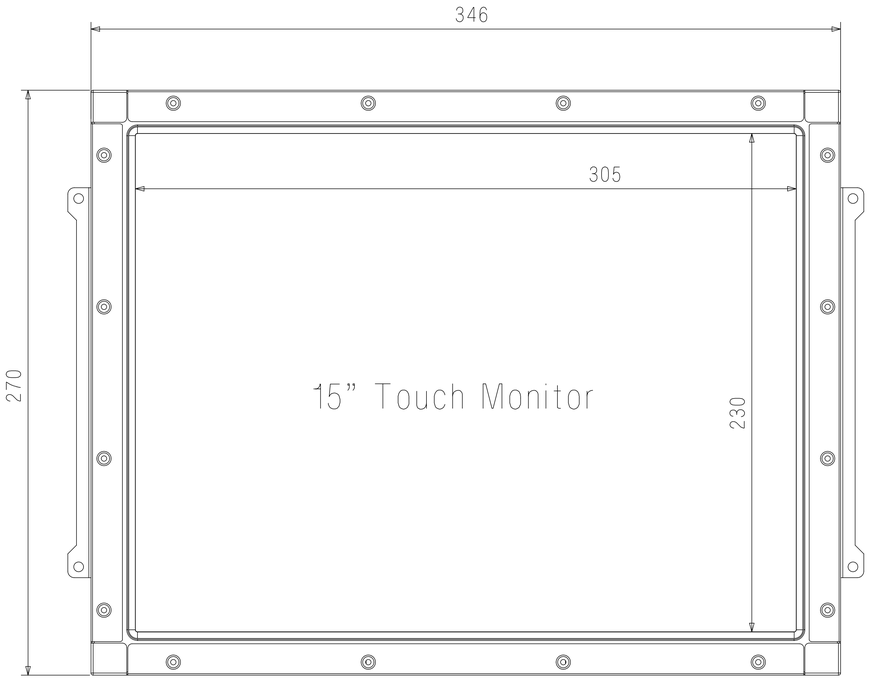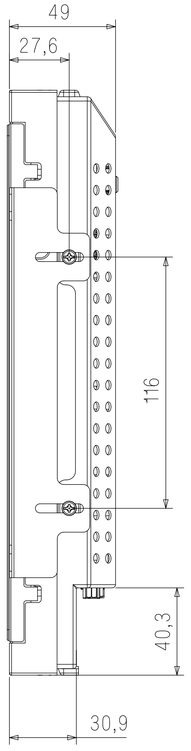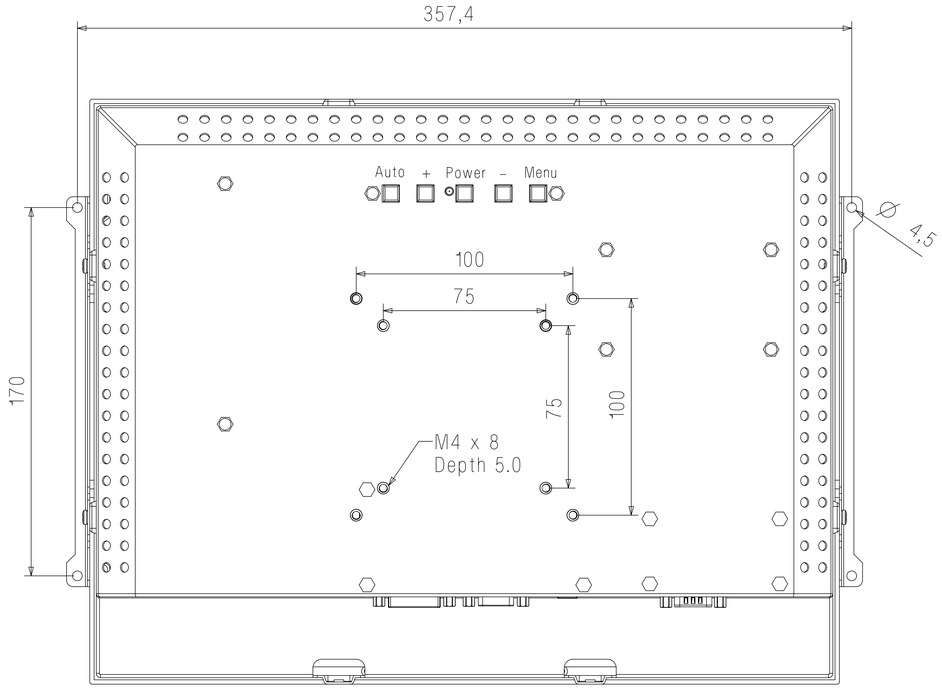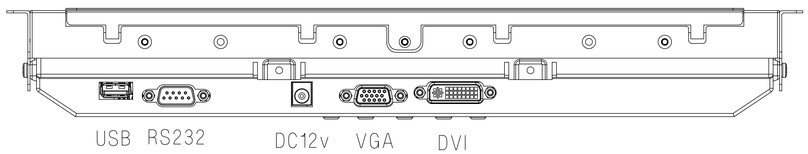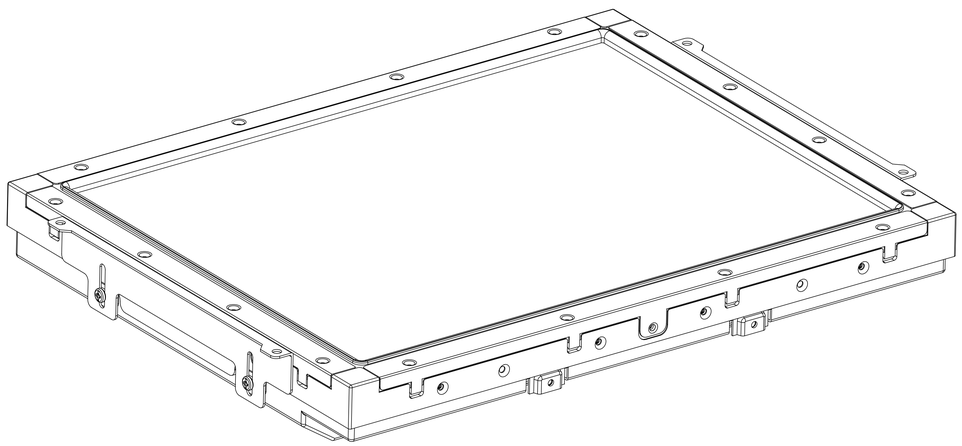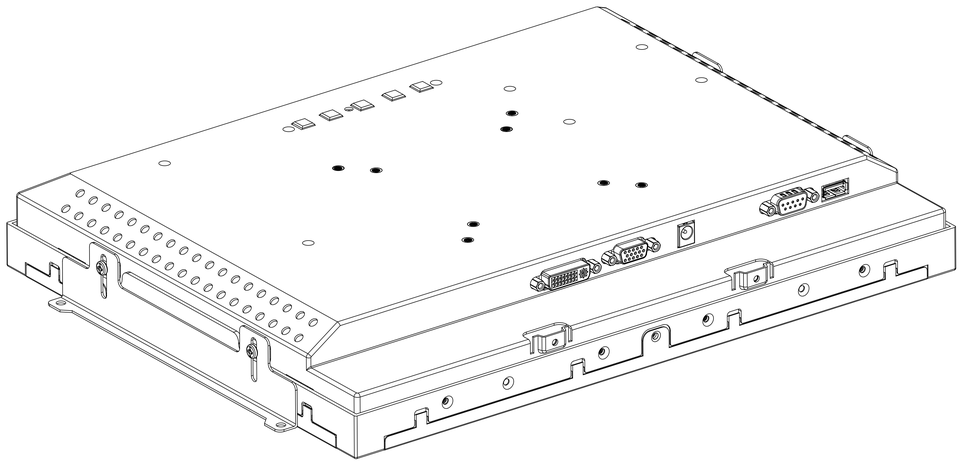29-Apr-2015 13:58:42 Create By Administr