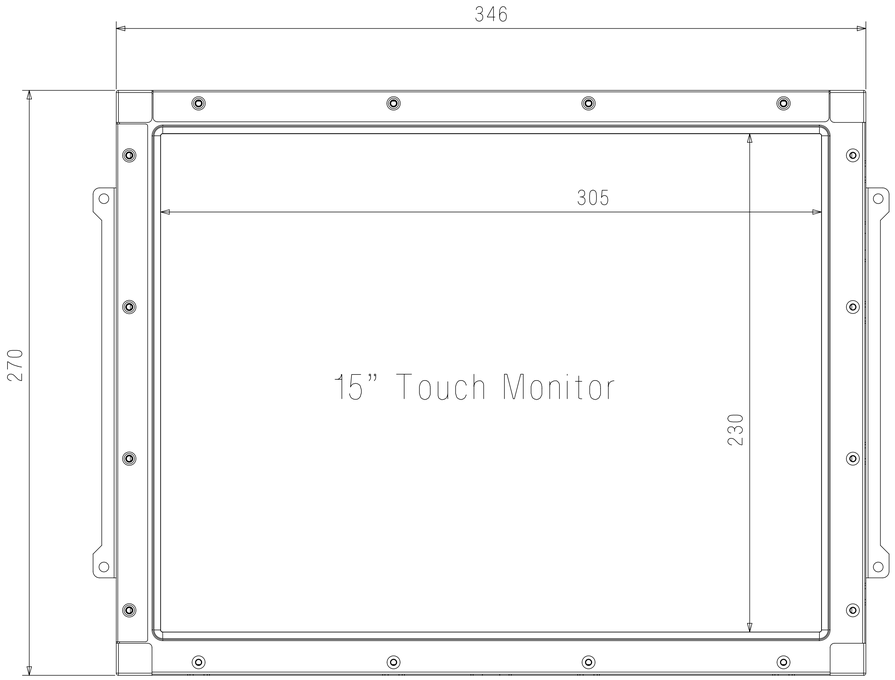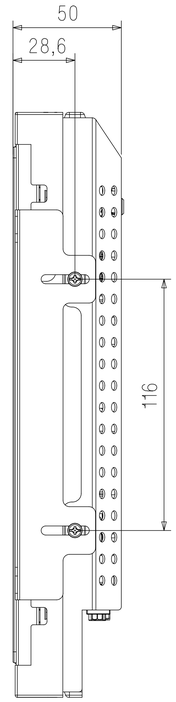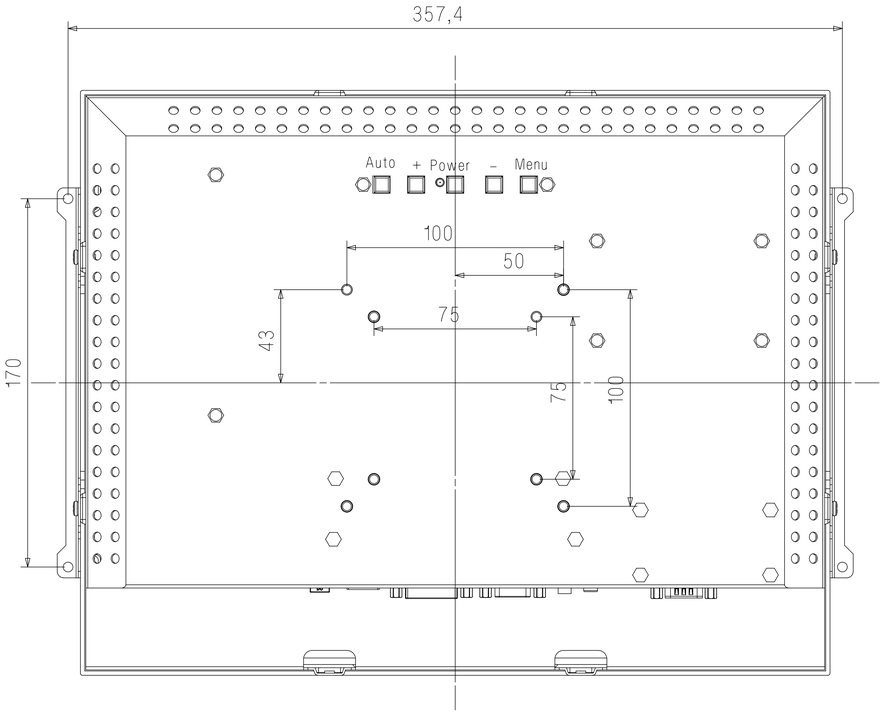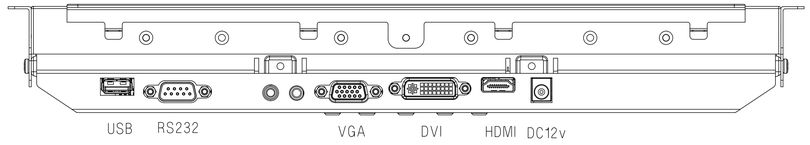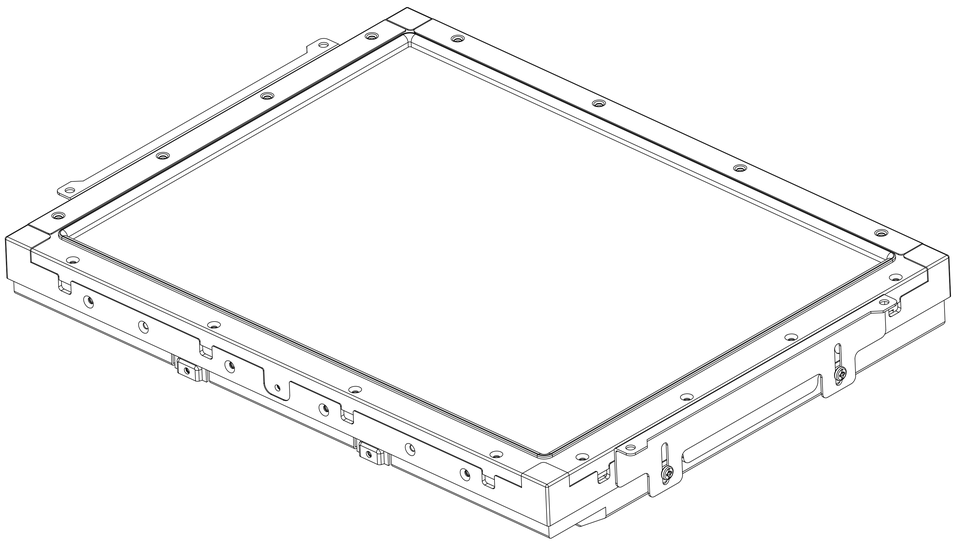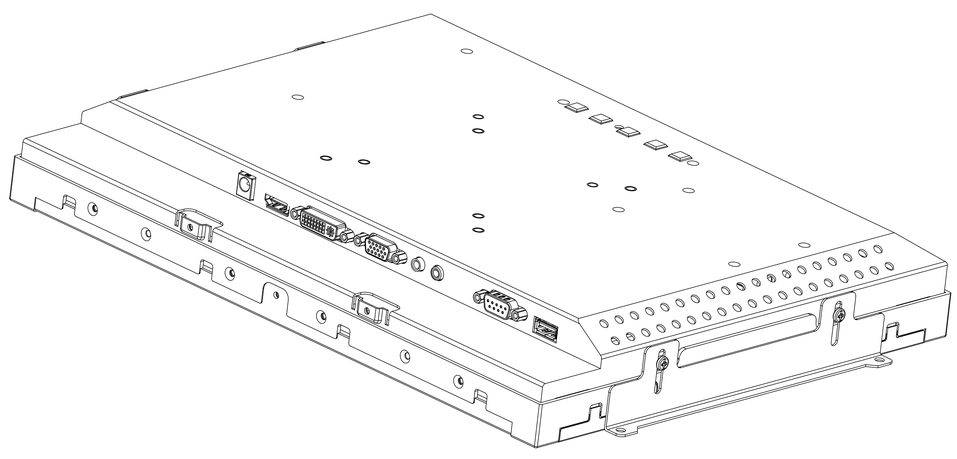29-Apr-2015 11:48:57 Create By Administr