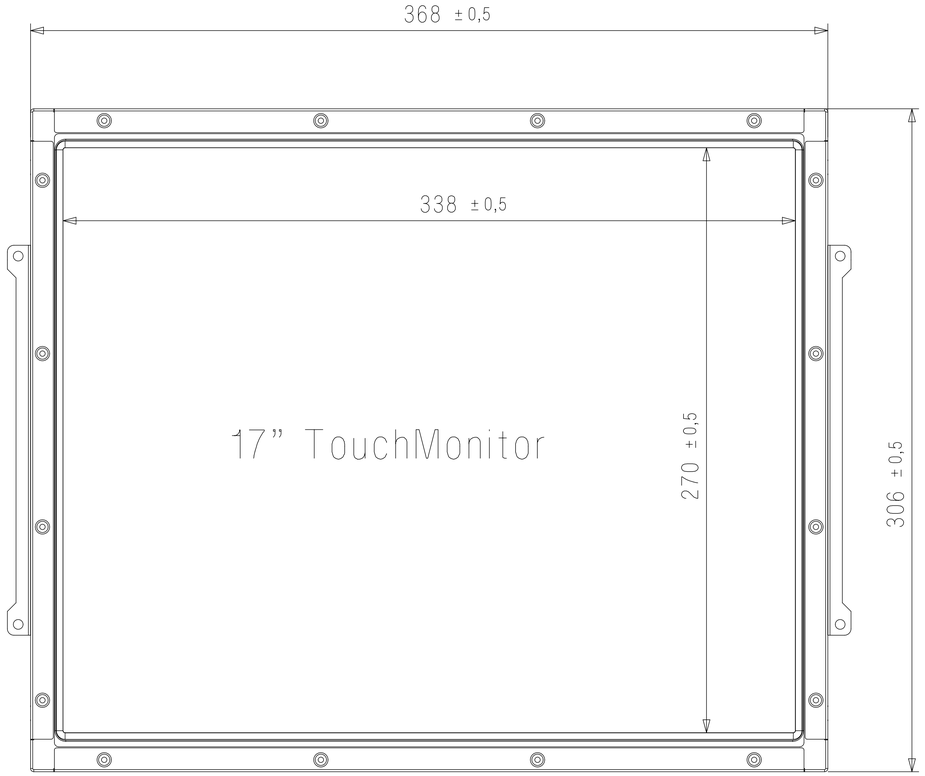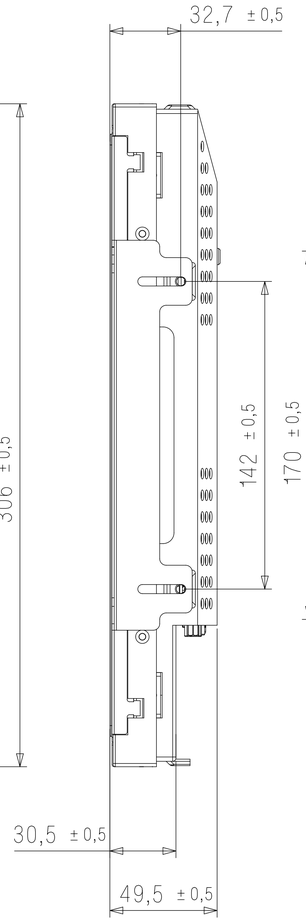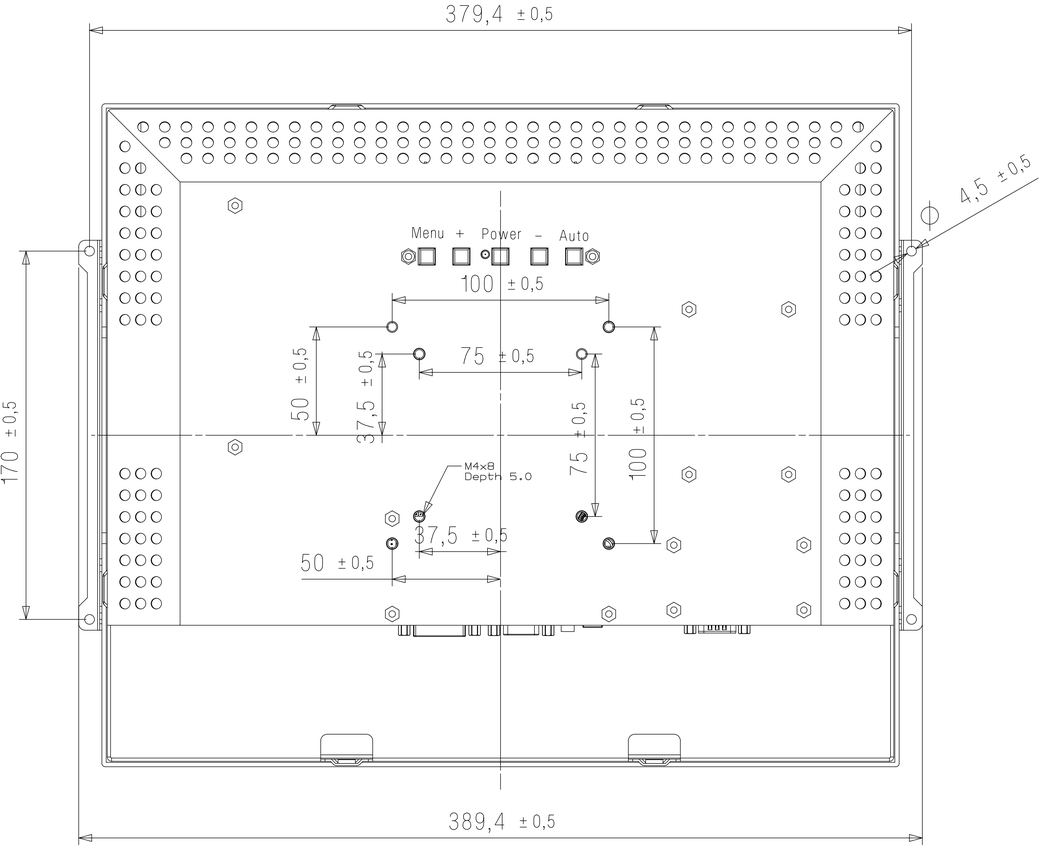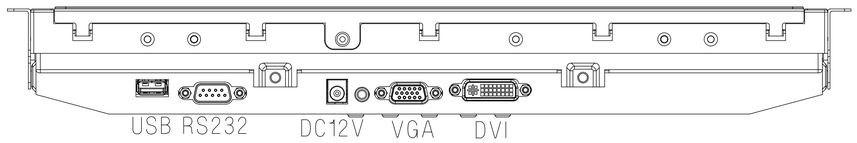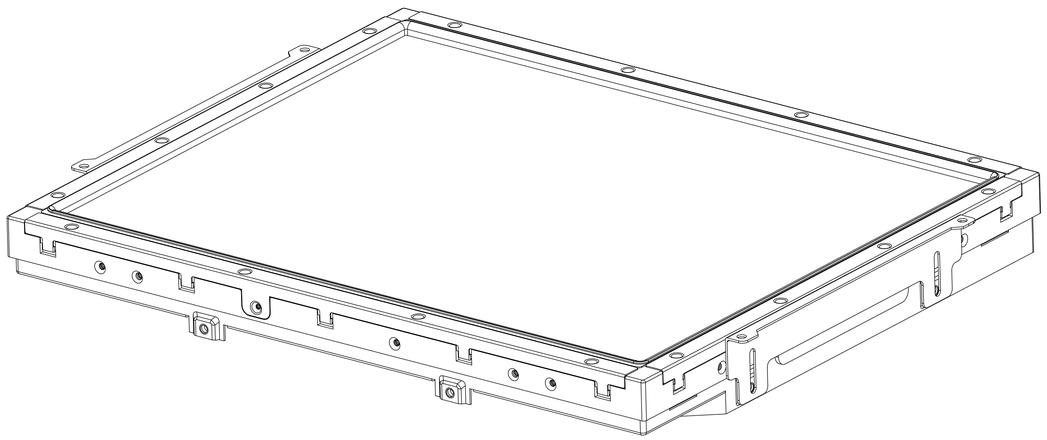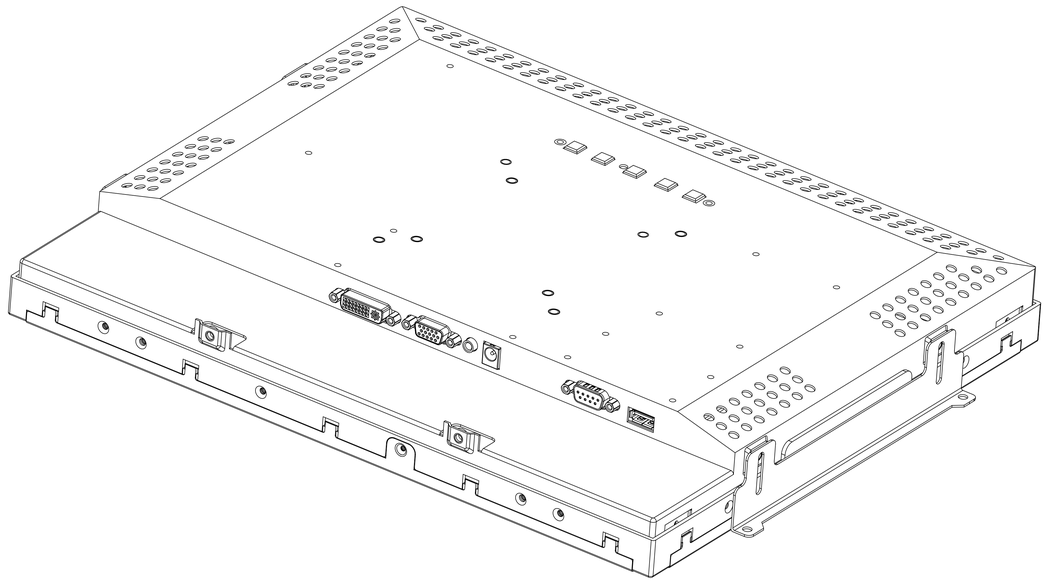25-Apr-2015 11:32:15 Create By Administr