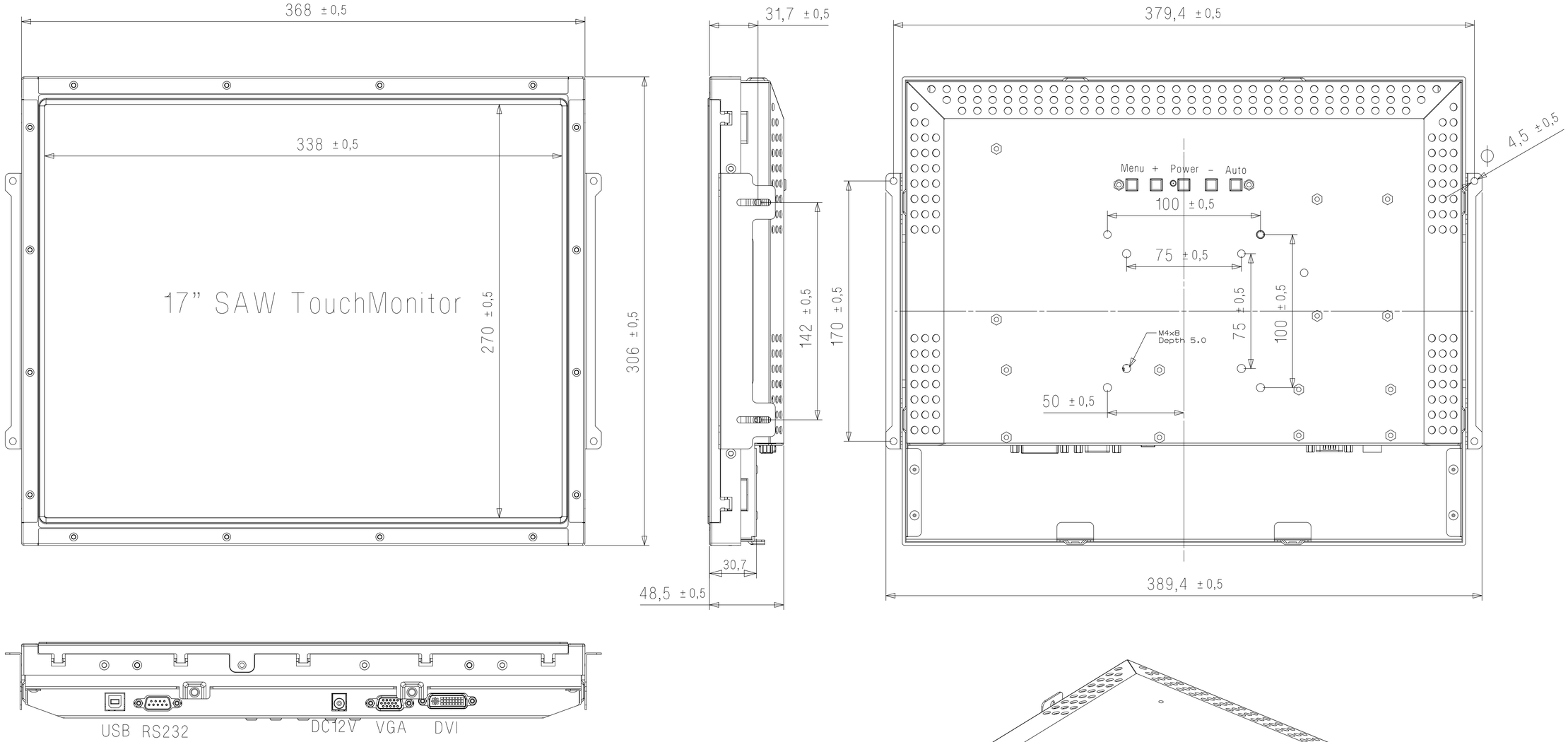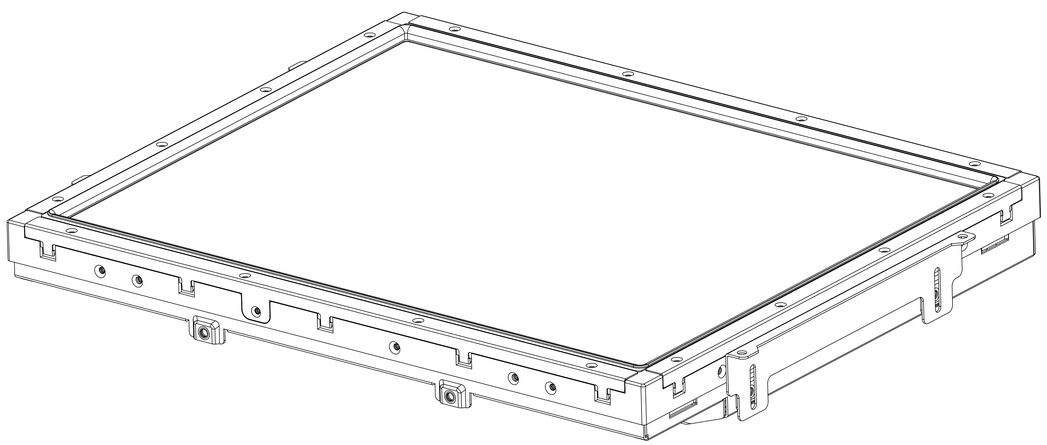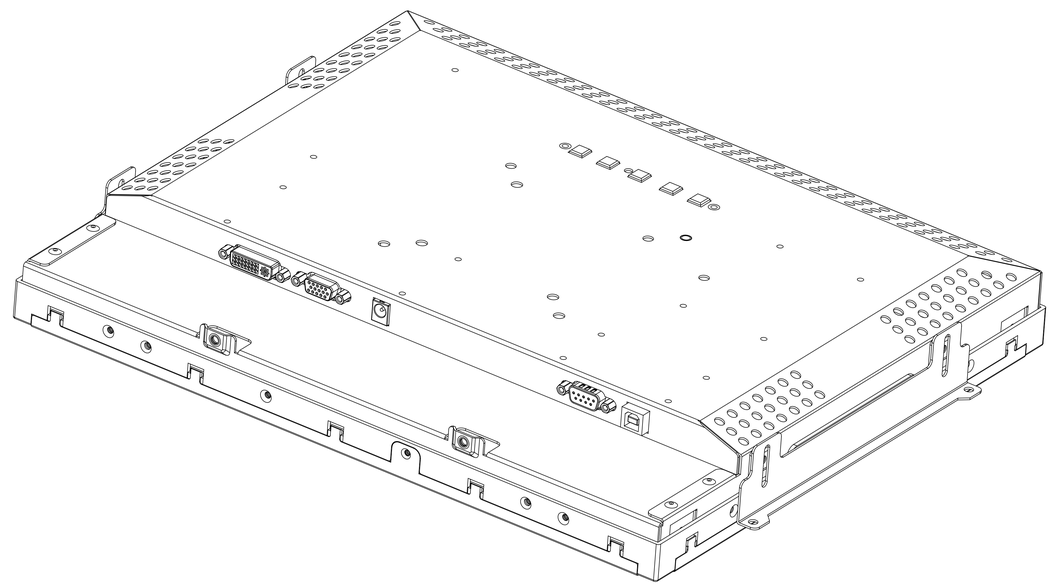23-Jun-2016 17:26:50 Create By Administr