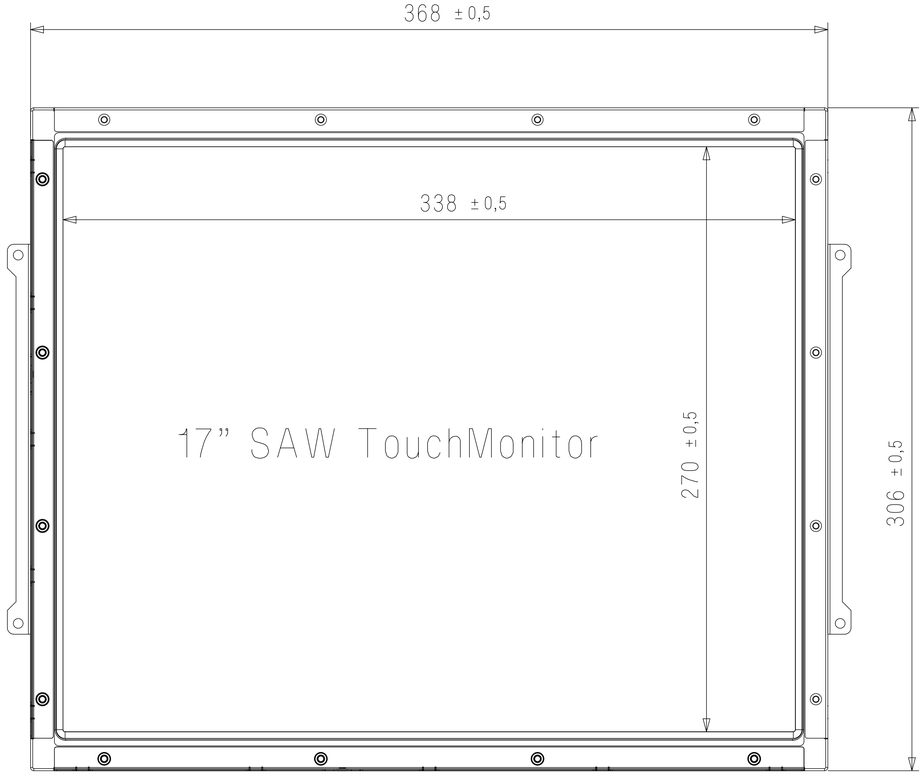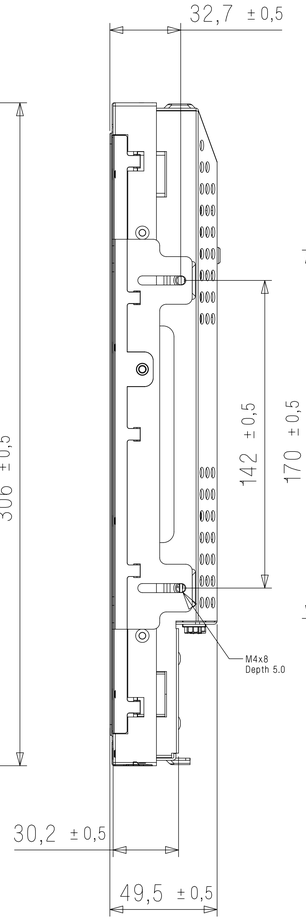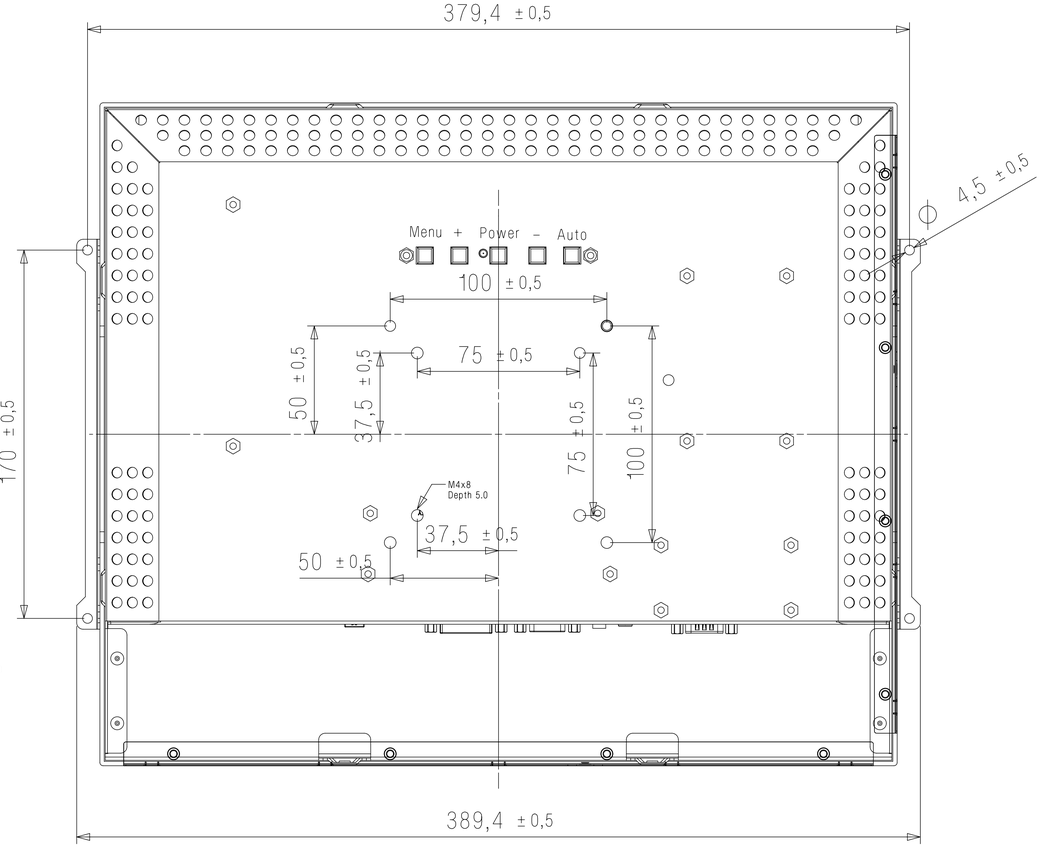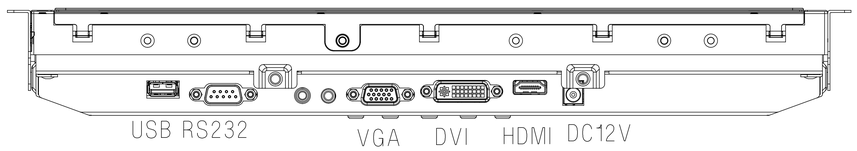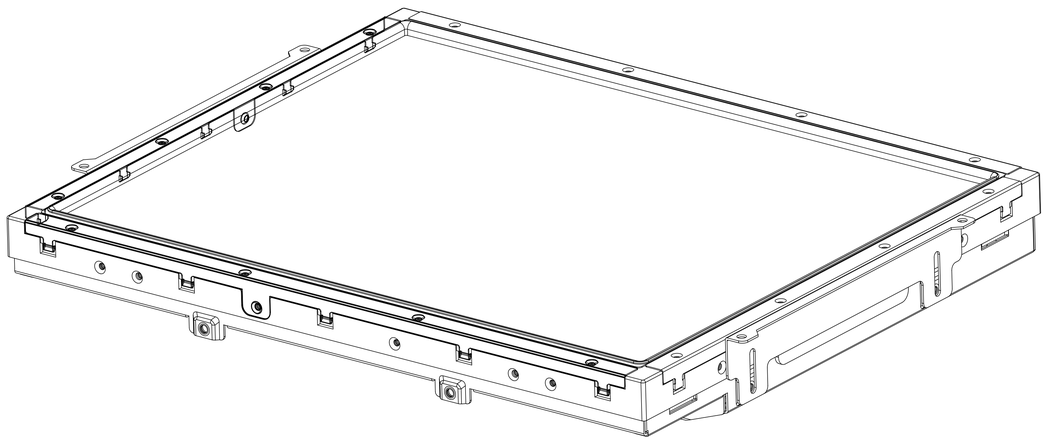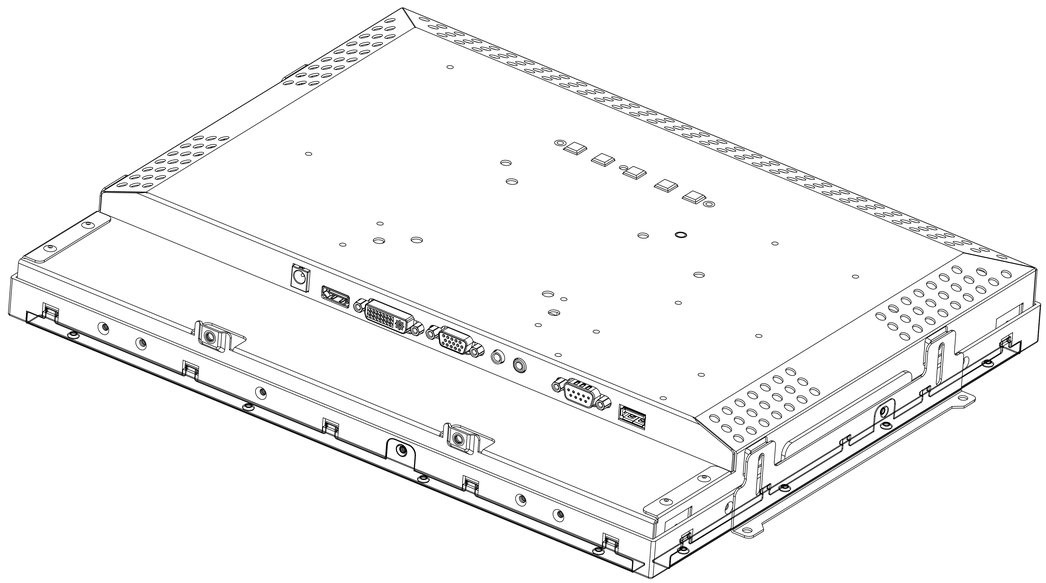01-Mar-2016 17:41:52 Create By Administr