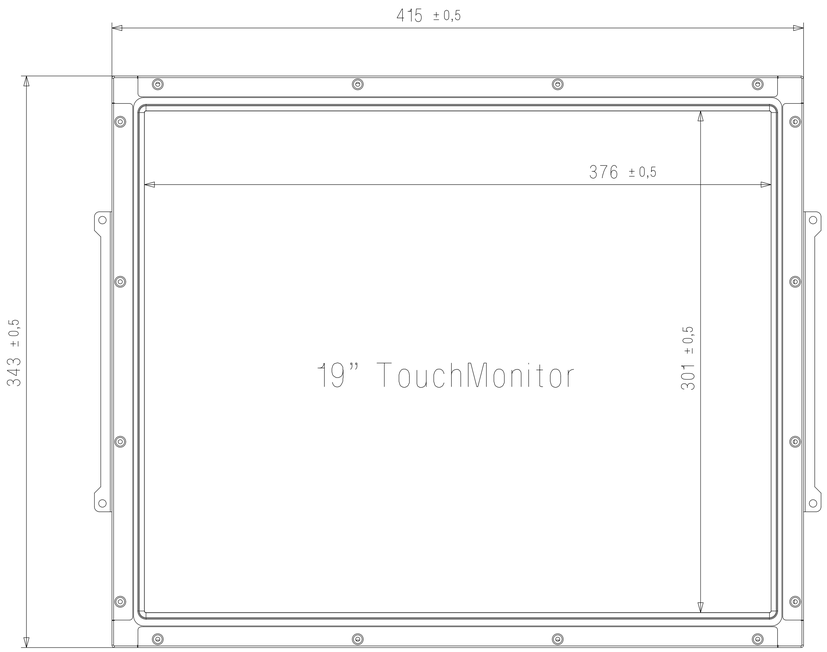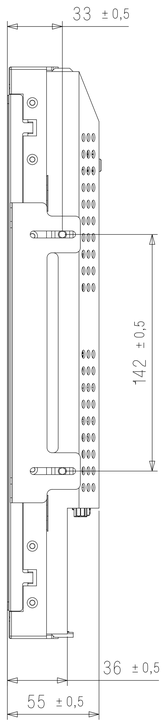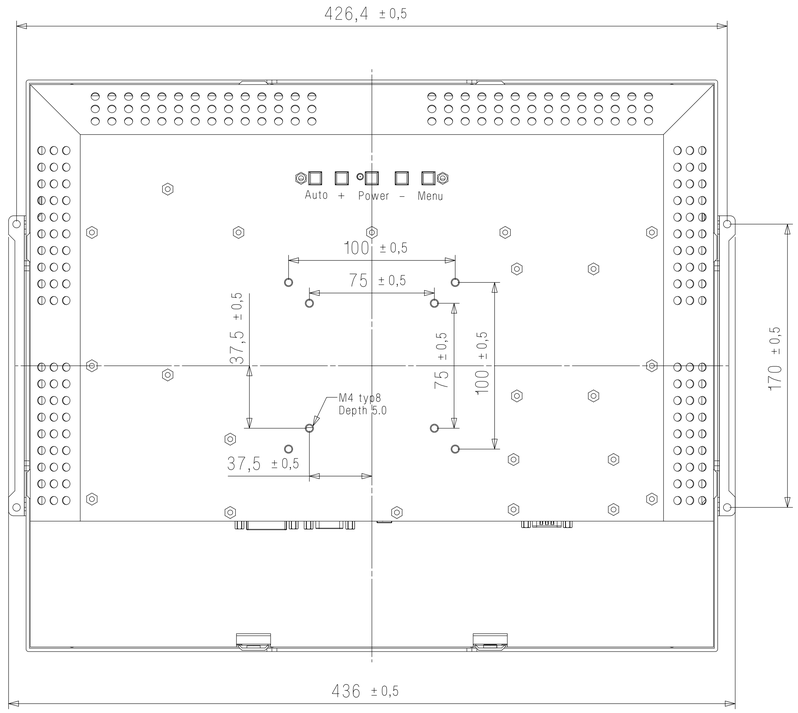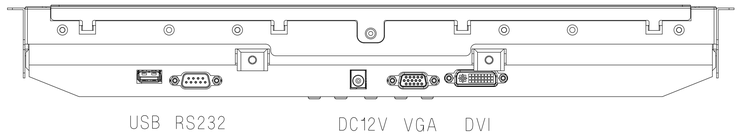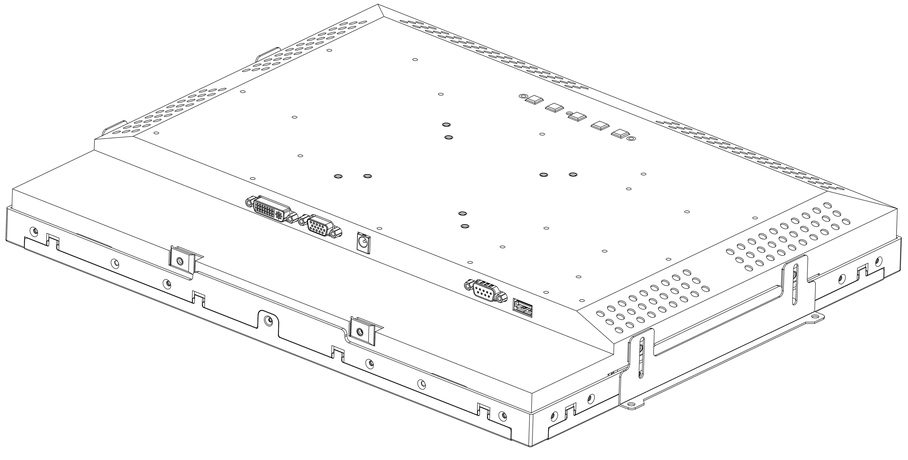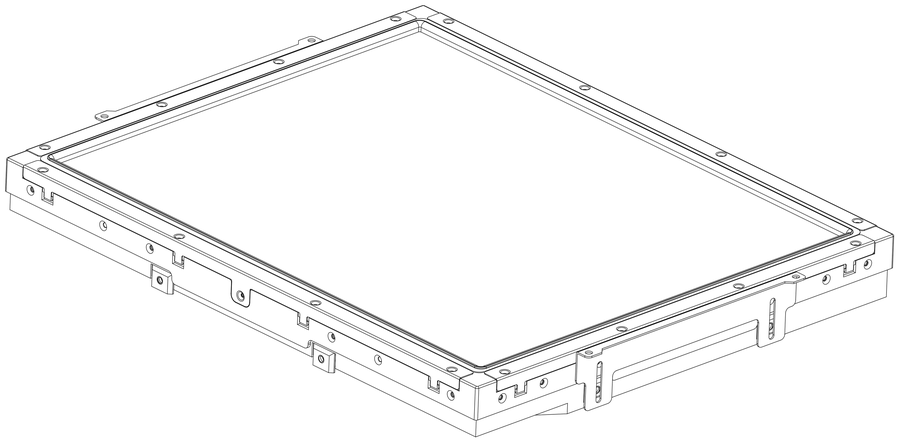25-Apr-2015 11:27:30 Create By Administrator