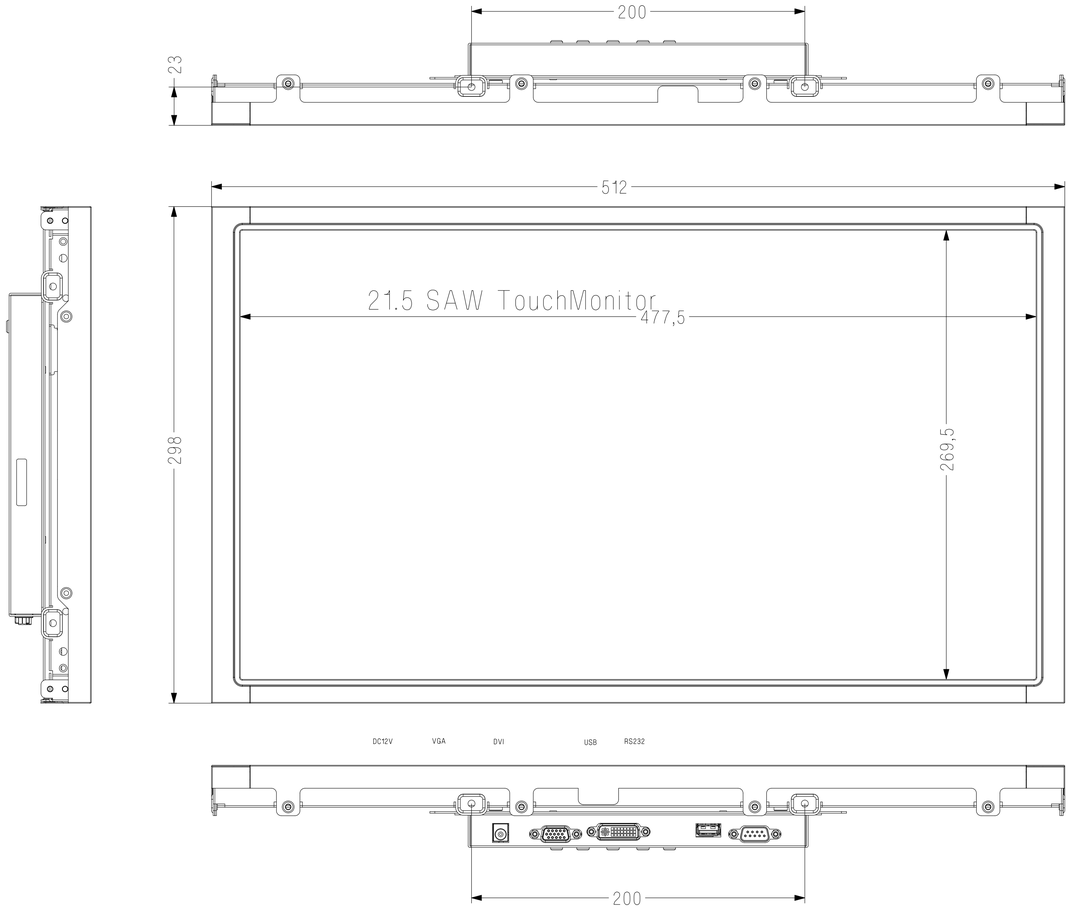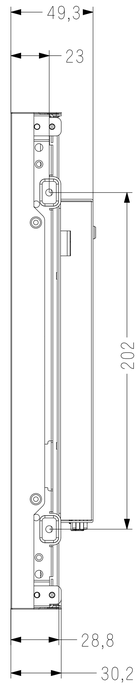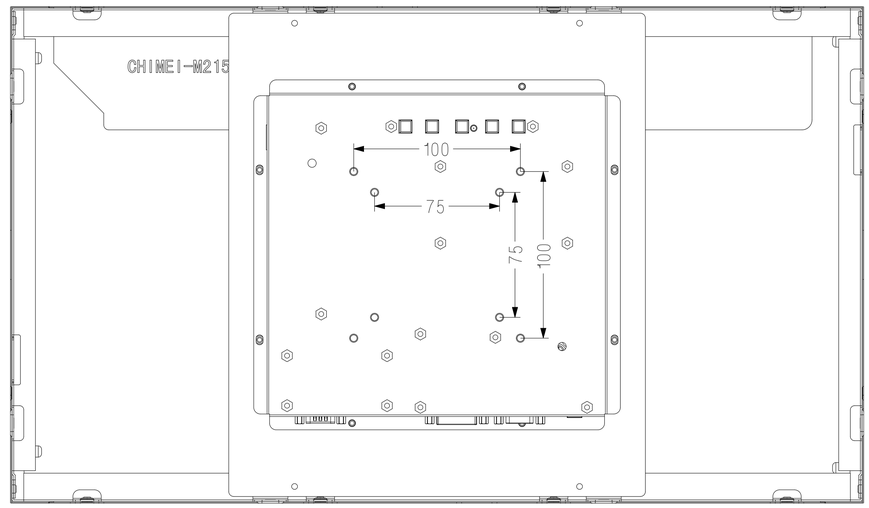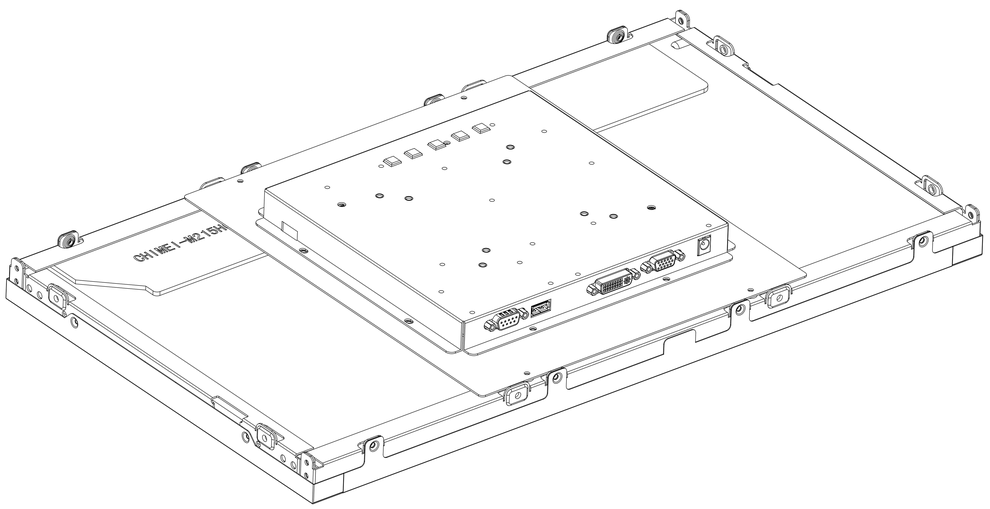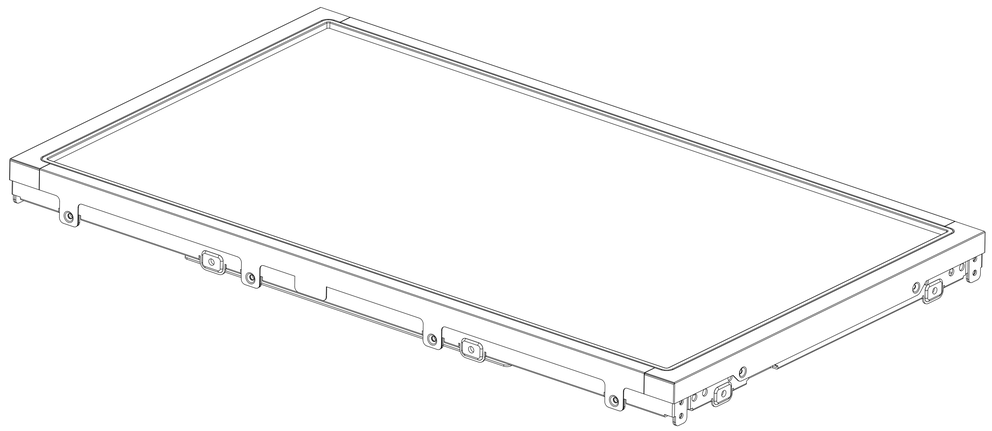11-Dec-2015 11:10:02 Create By Admin