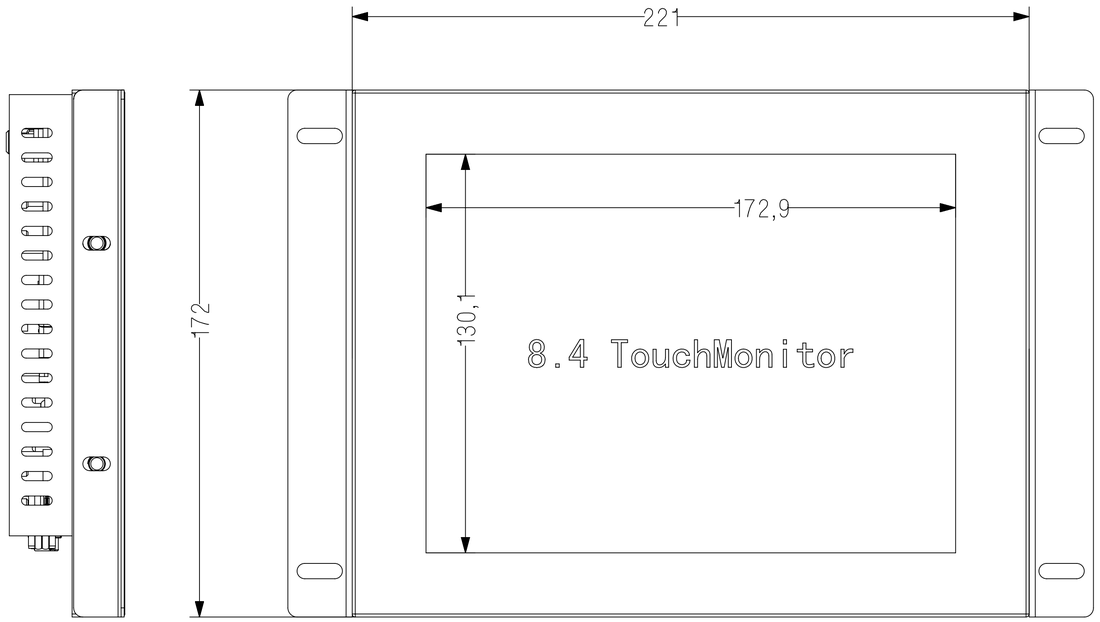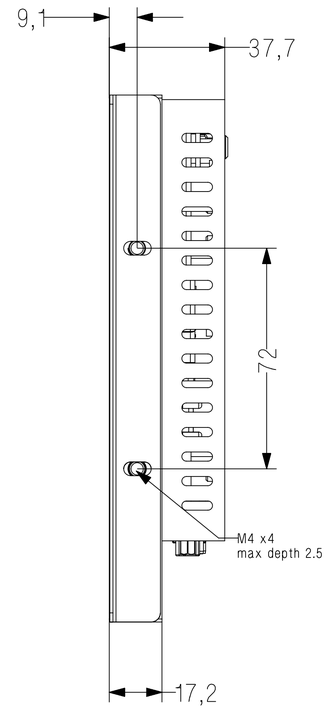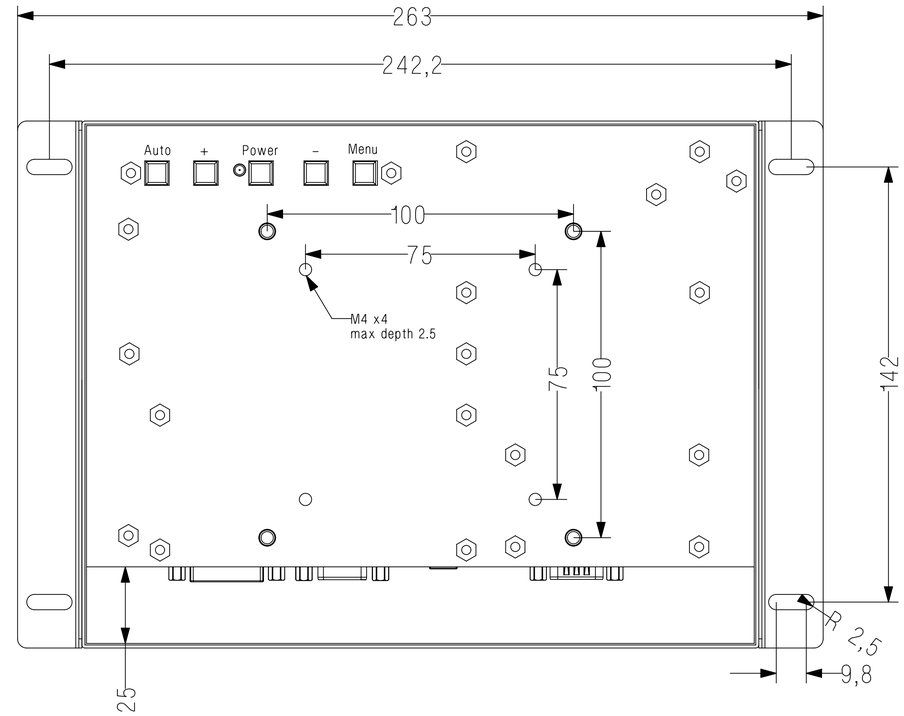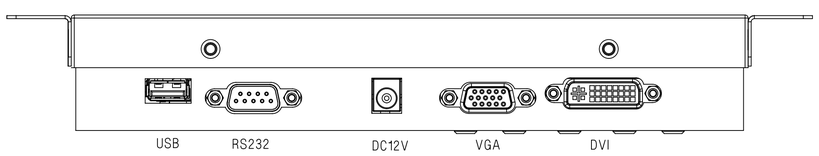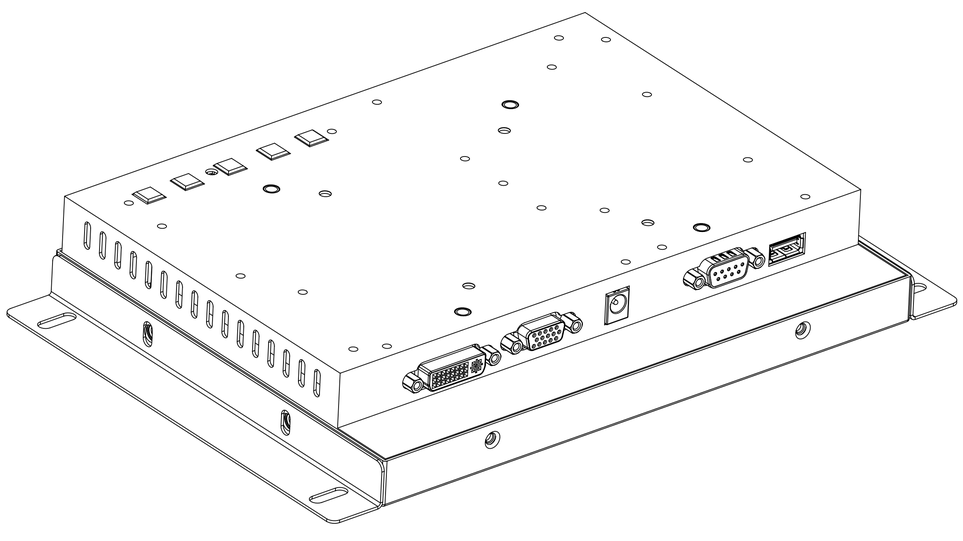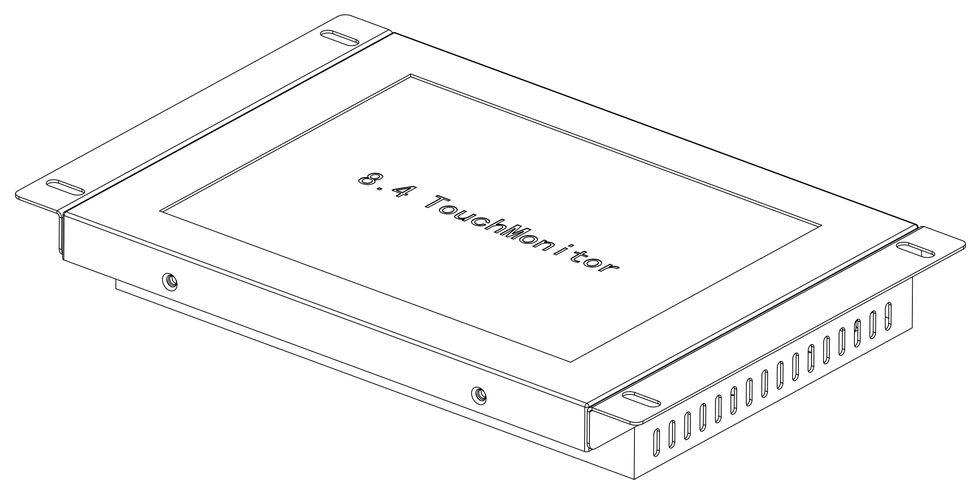10-Aug-2015 14:45:30 Create By Administrat