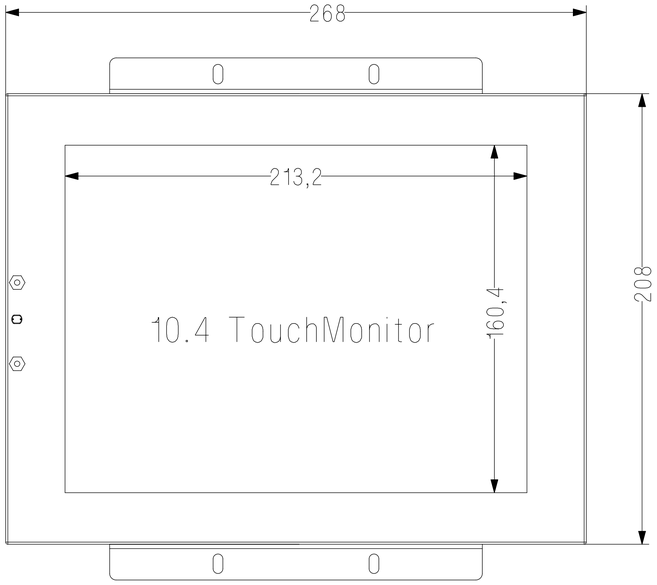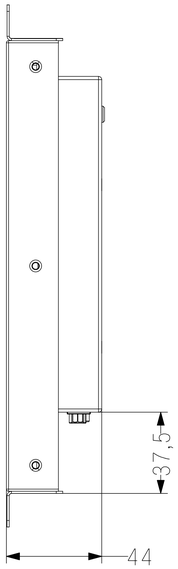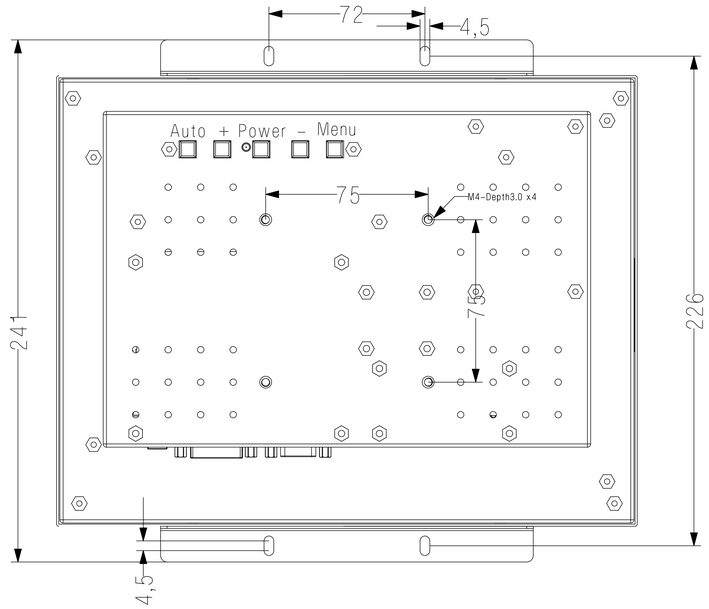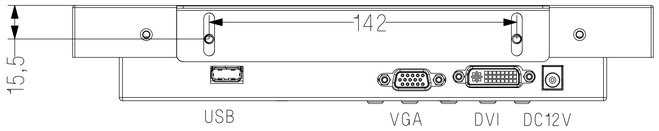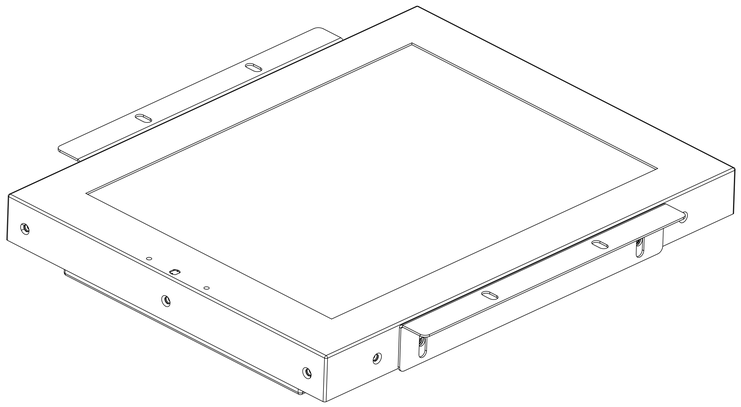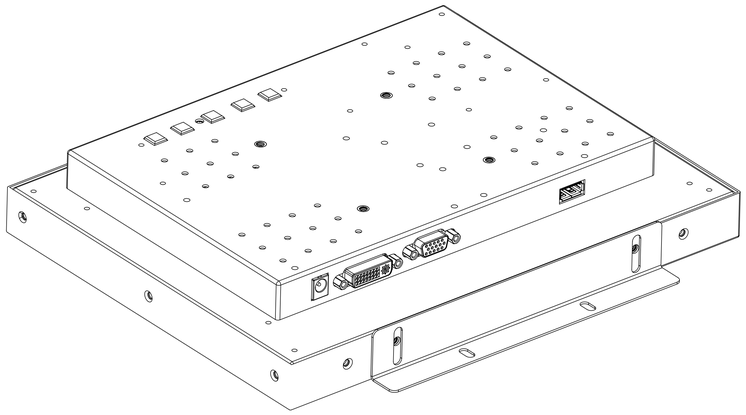27-Mar-2015 17:06:35 Create By Administr