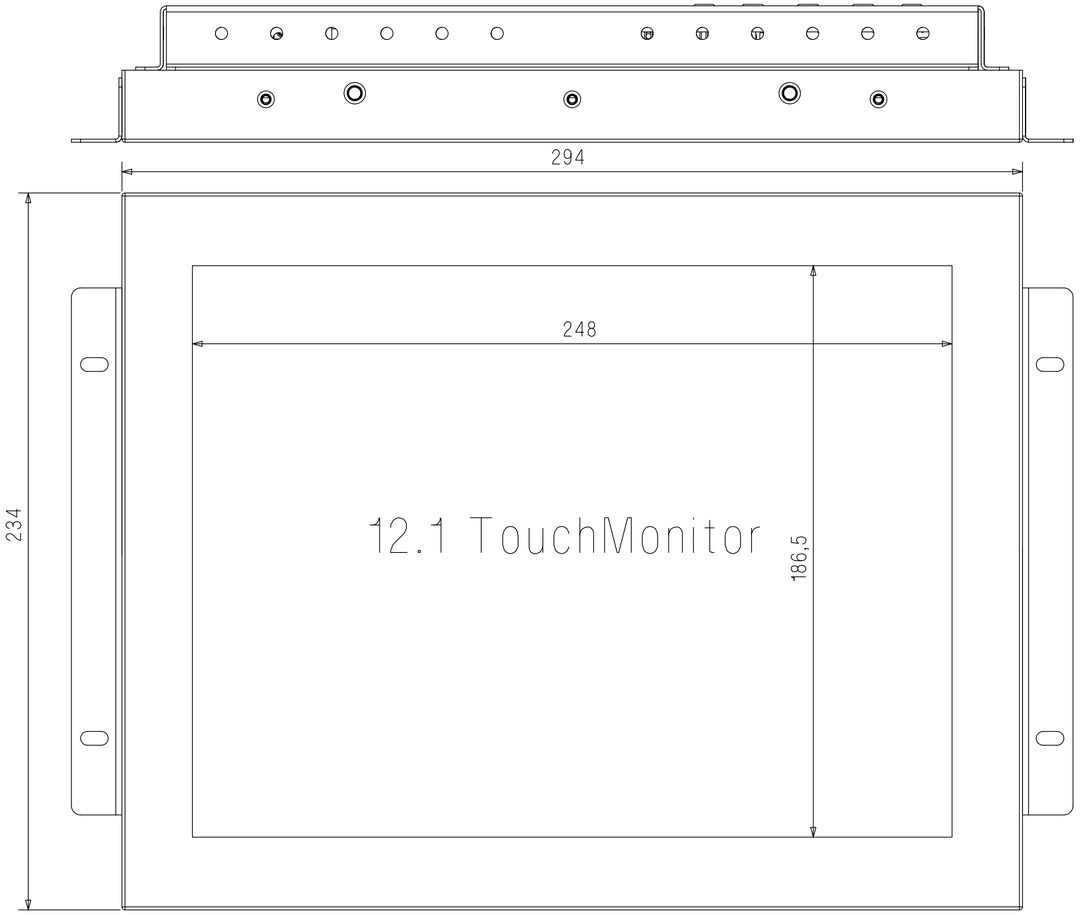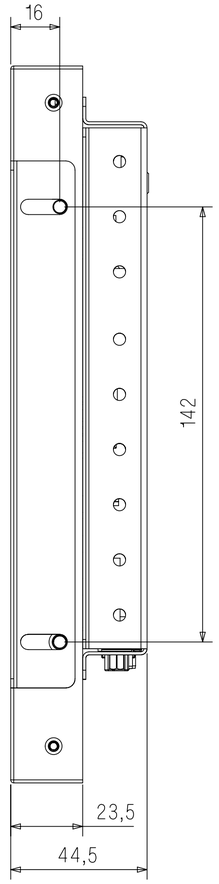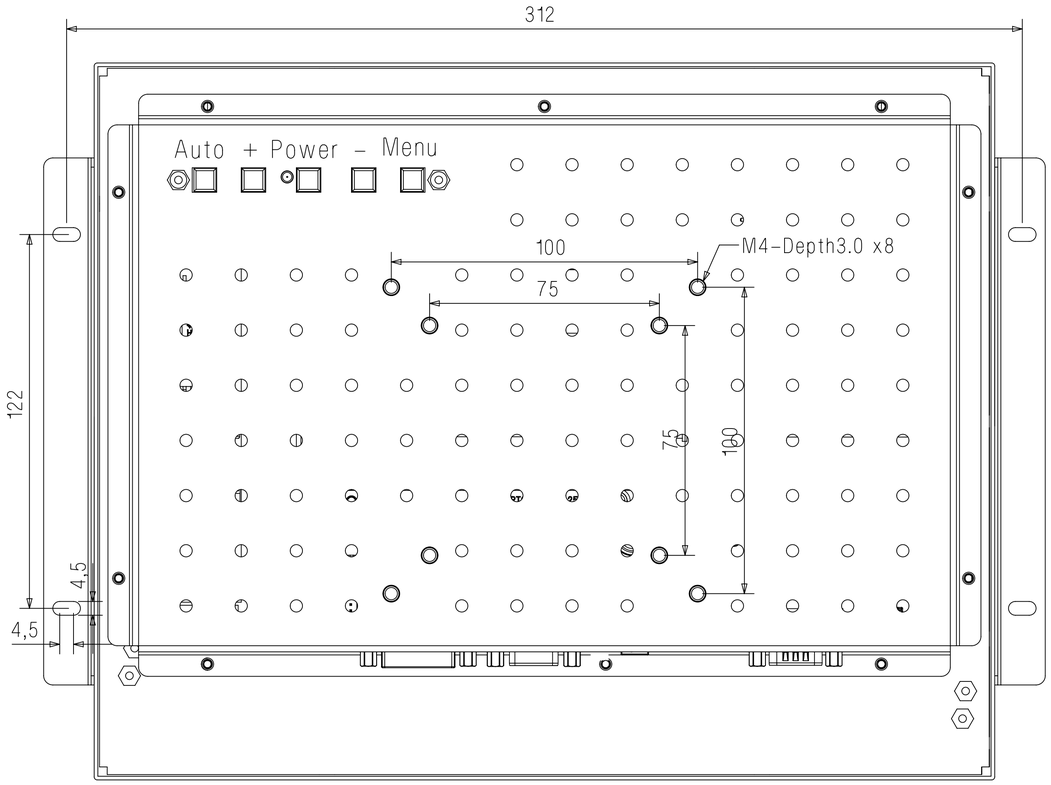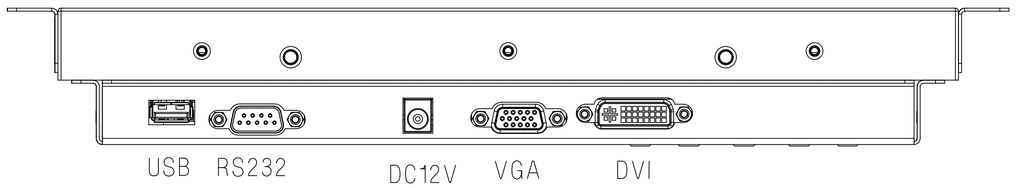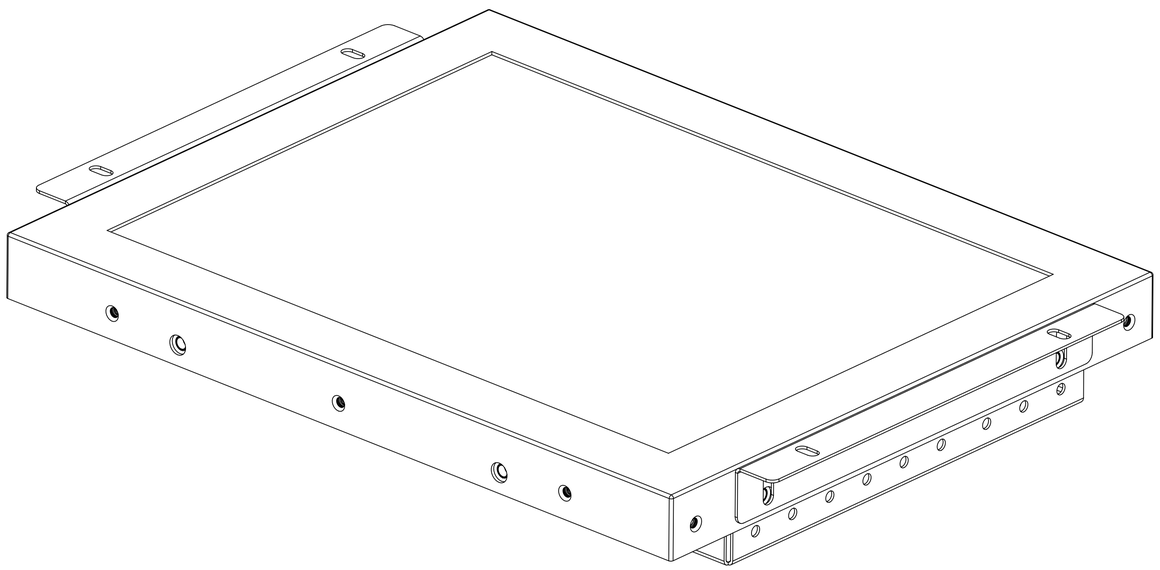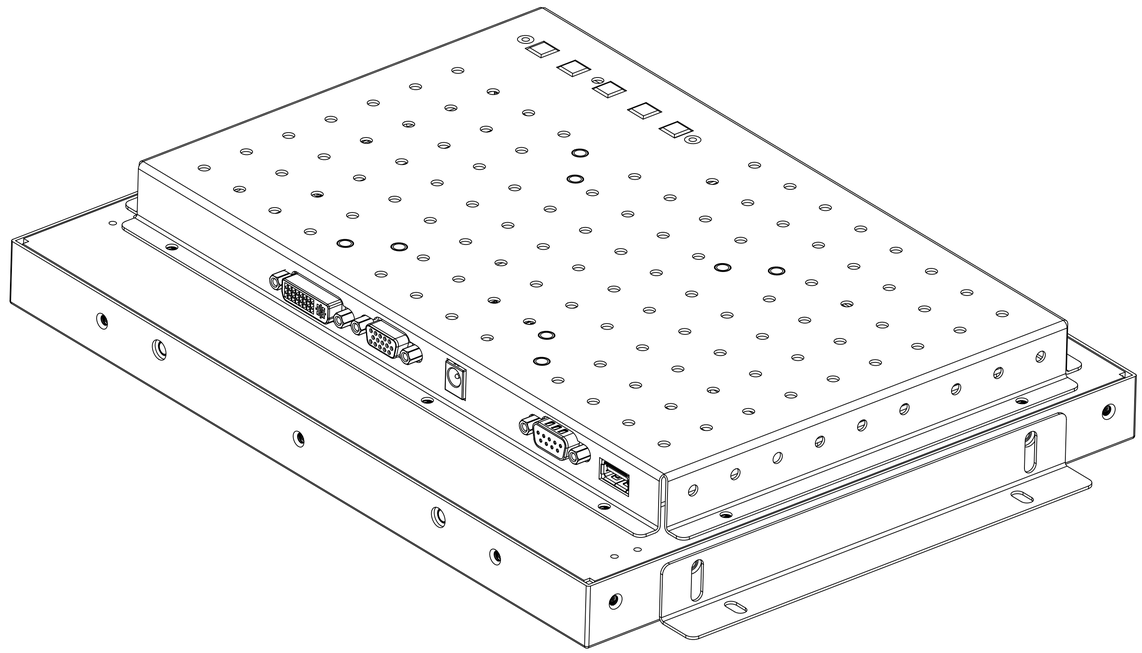27-Mar-2015 17:05:34 Create By Administrat