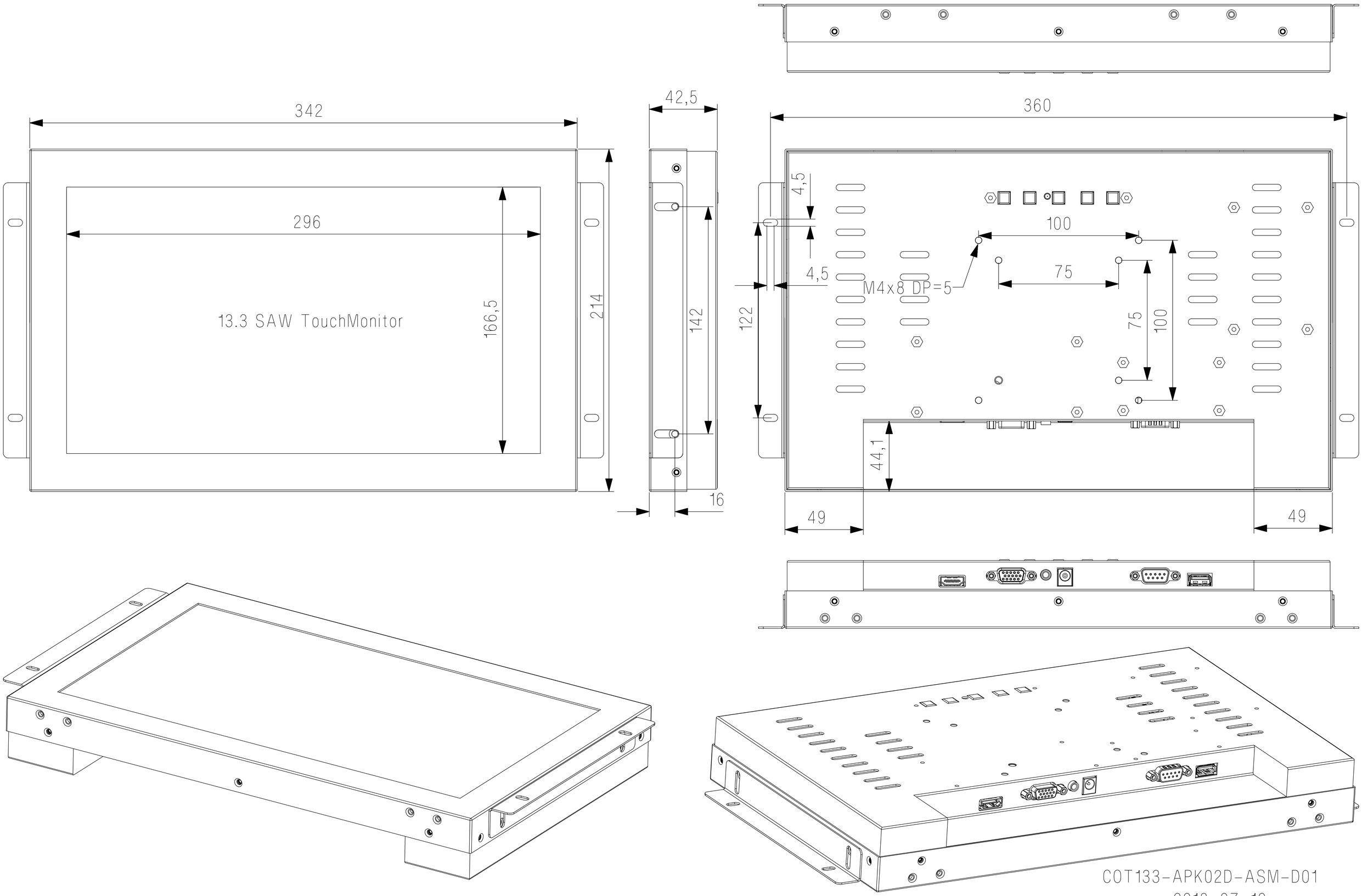10-Jul-2018 16:05:21 Create By Administra