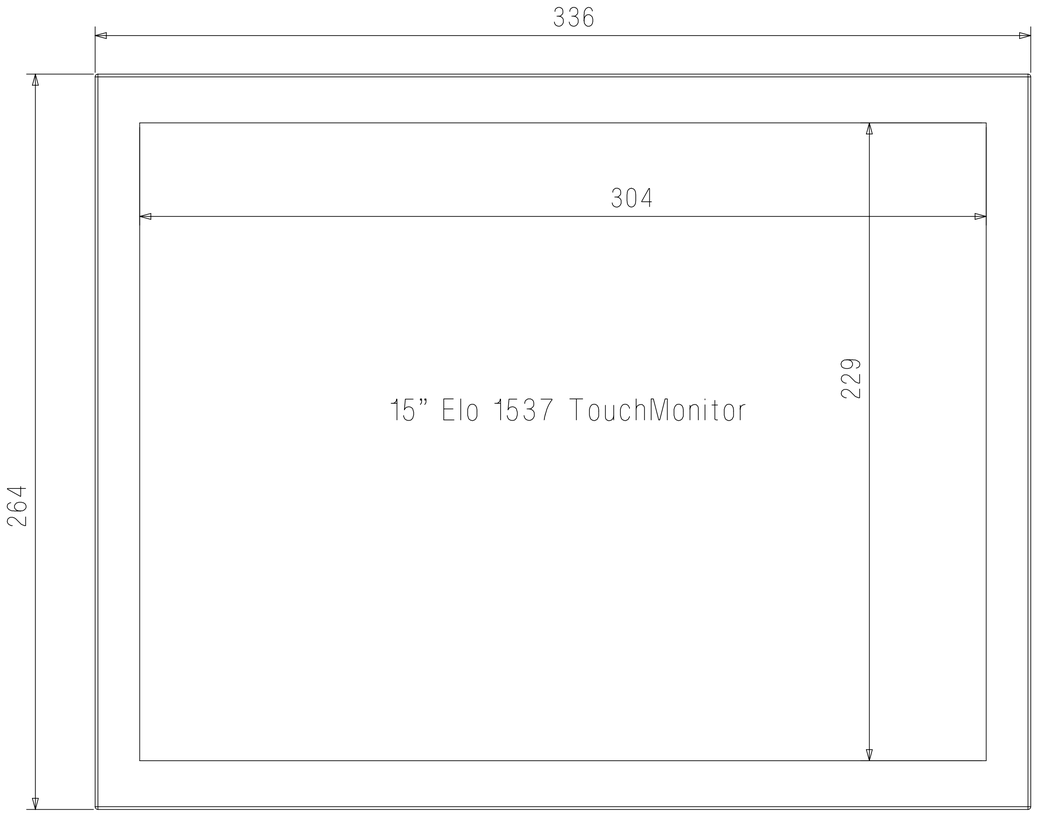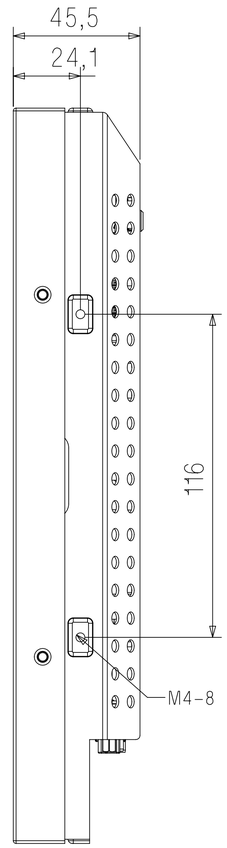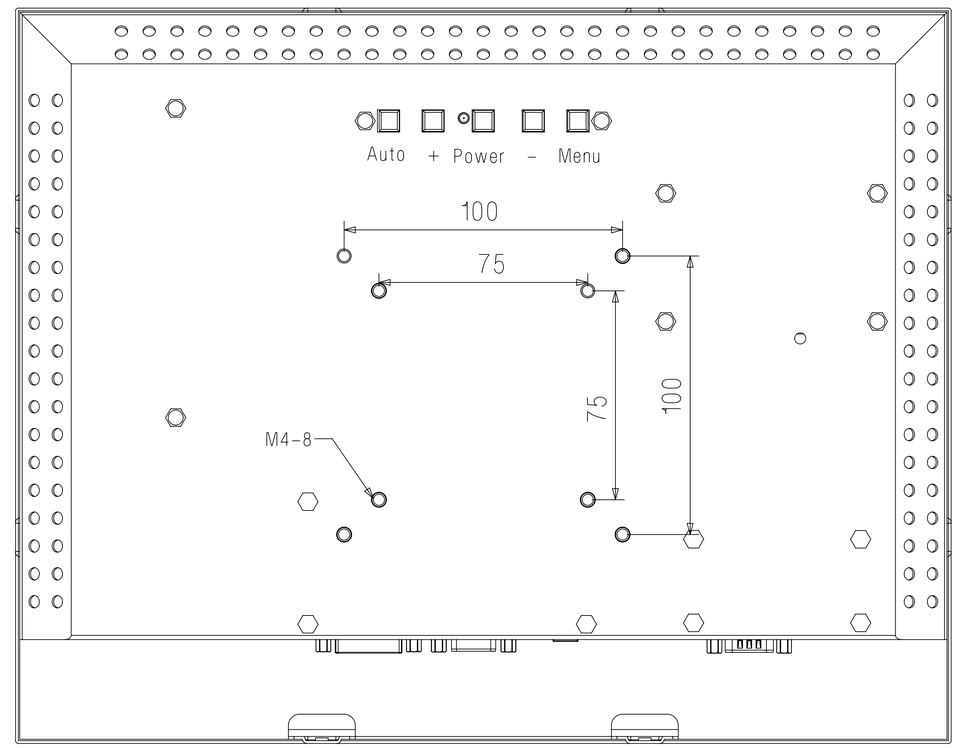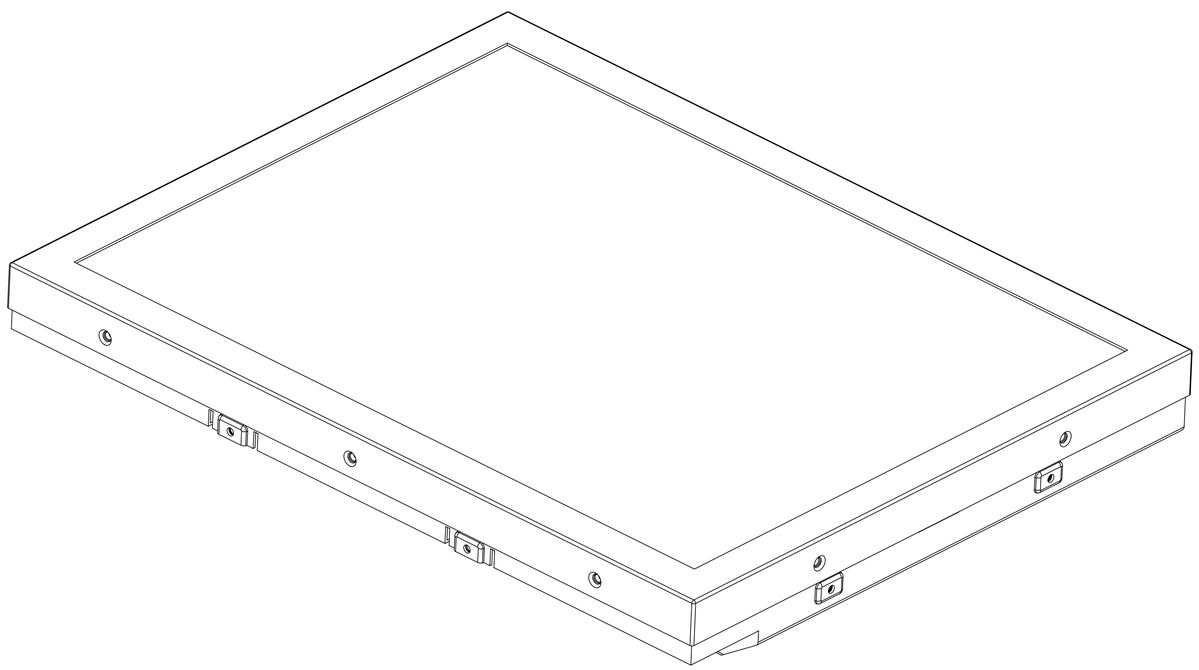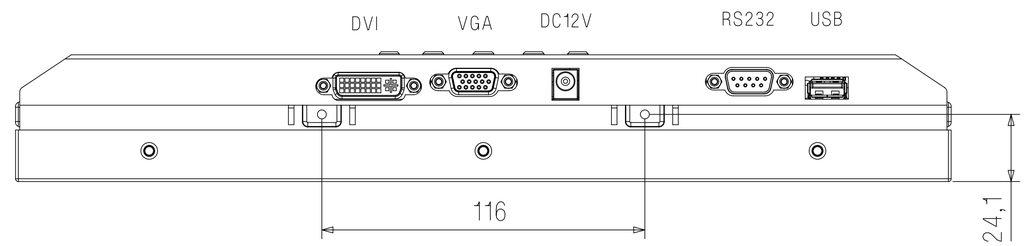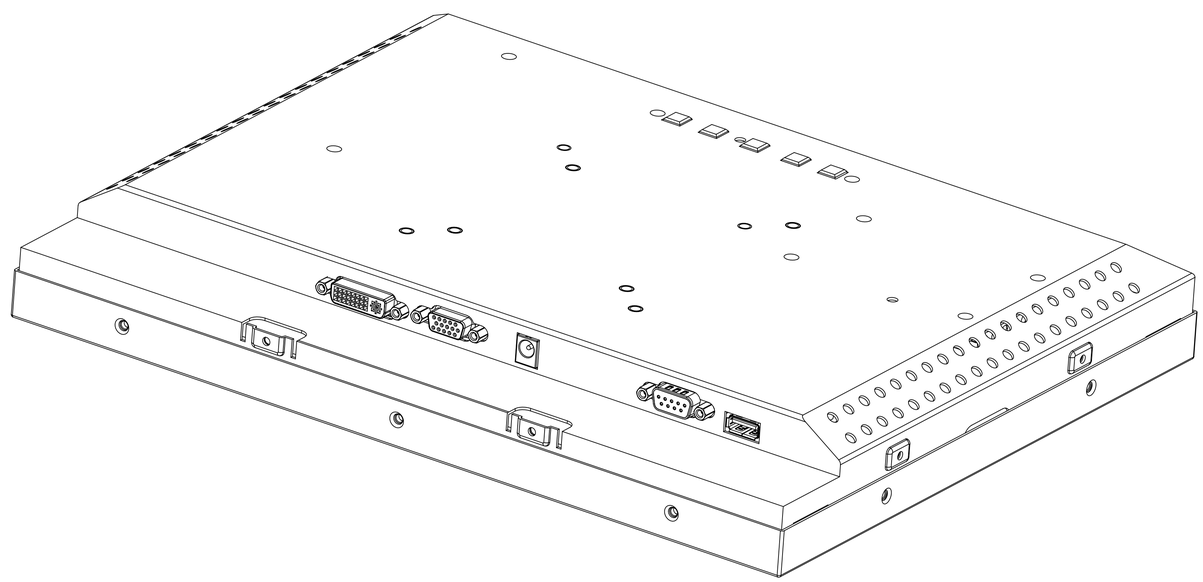01-Apr-2016 11:35:07 Create By Administrat