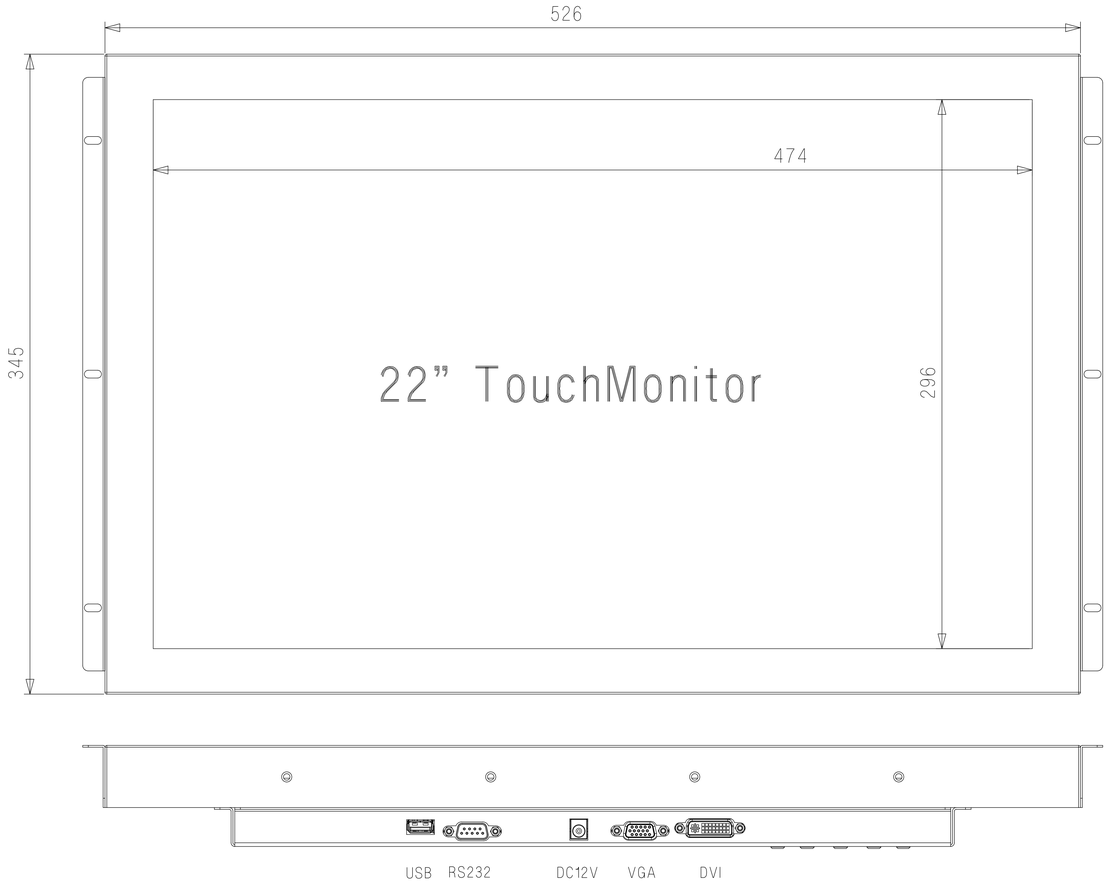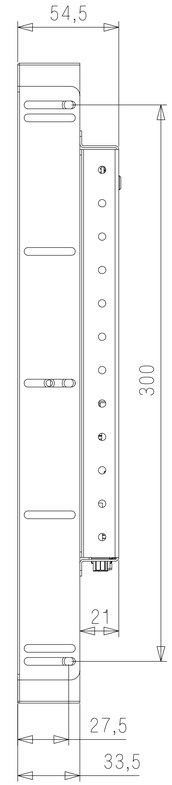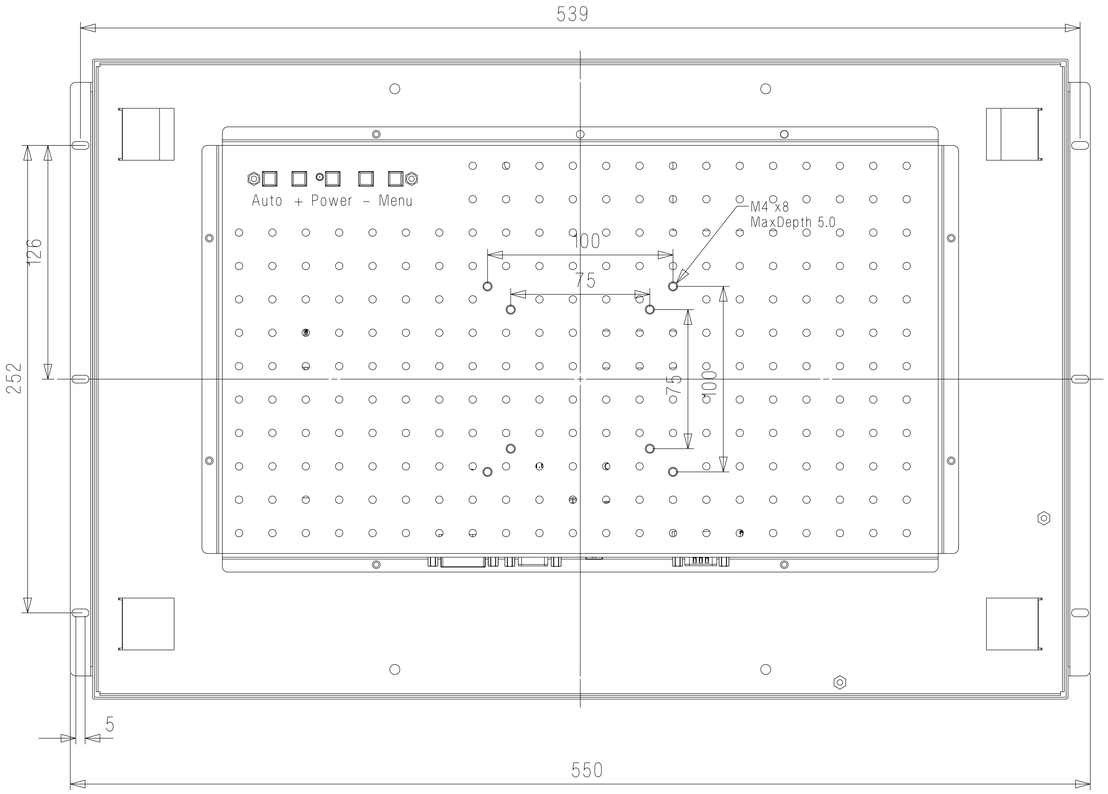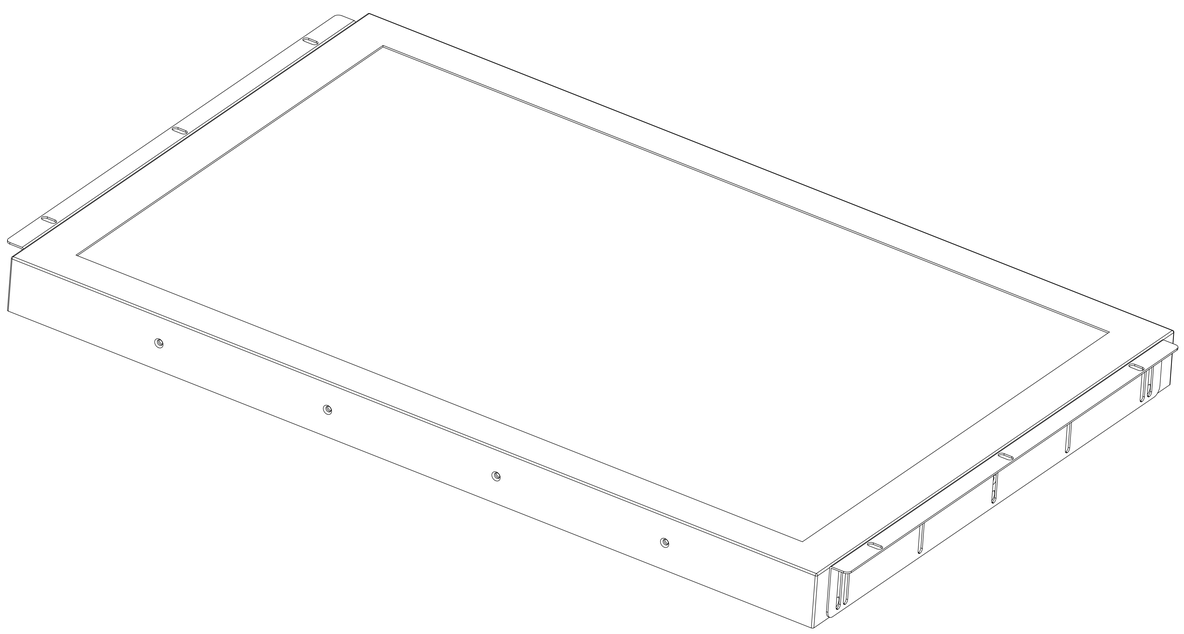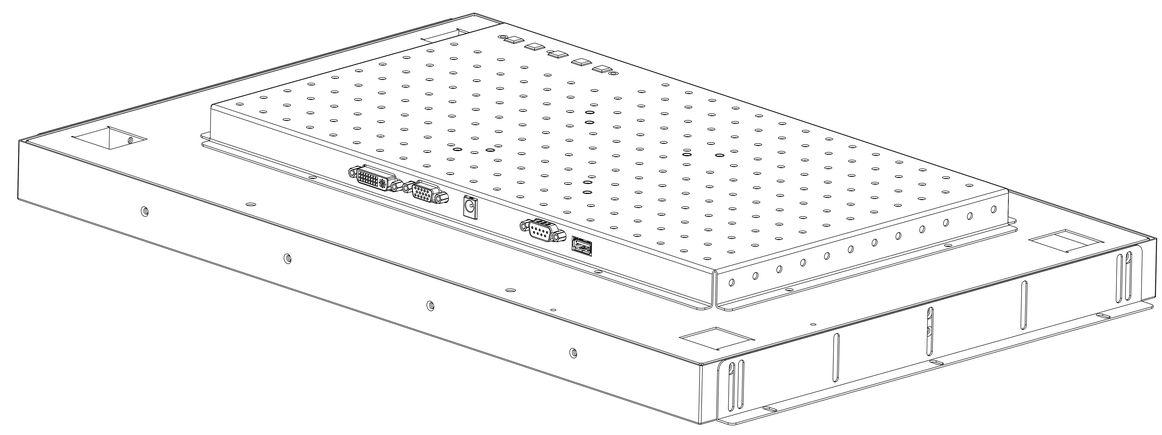01-Apr-2015 10:39:32 Create By Administrator