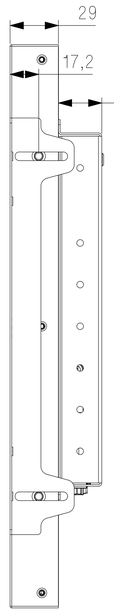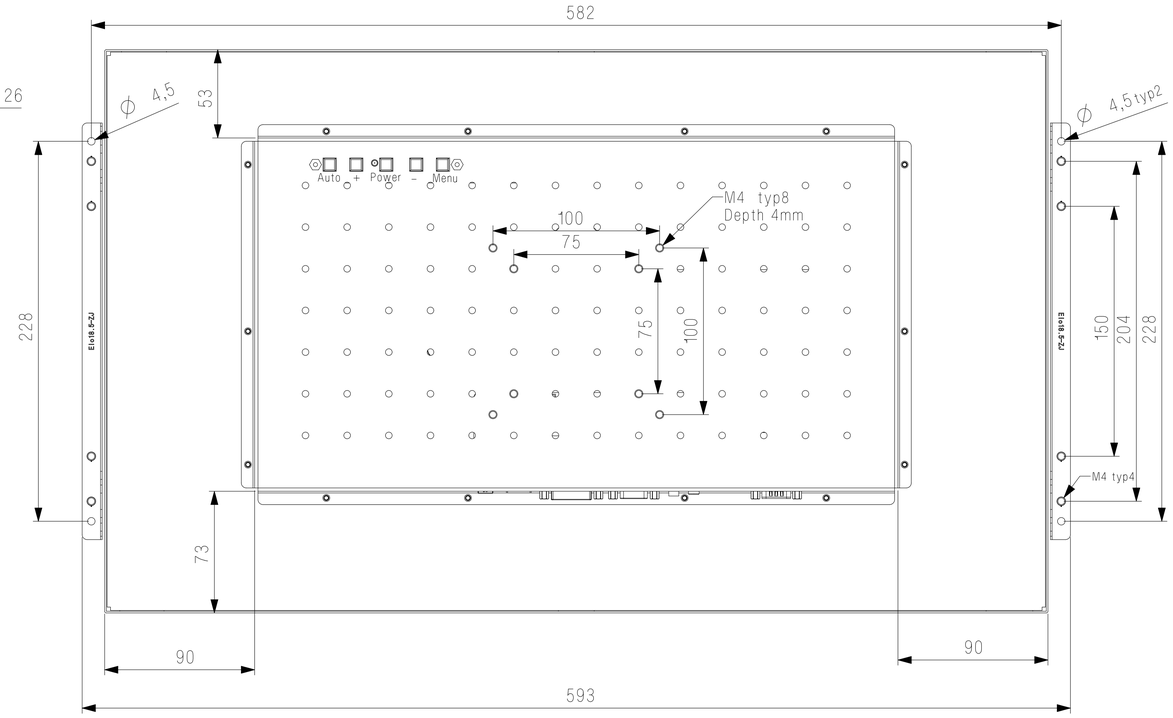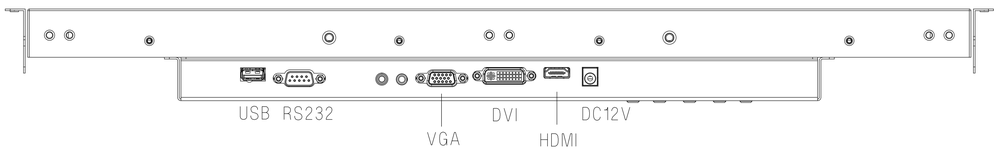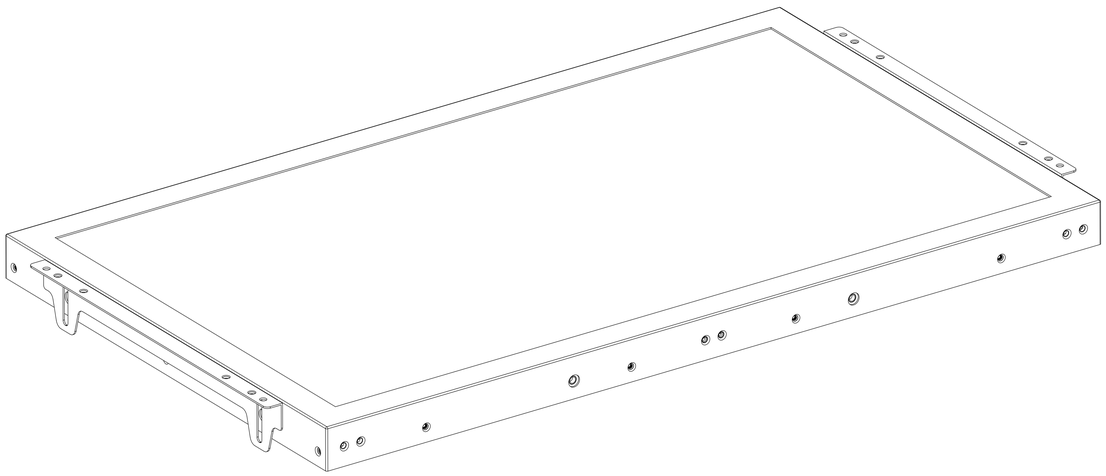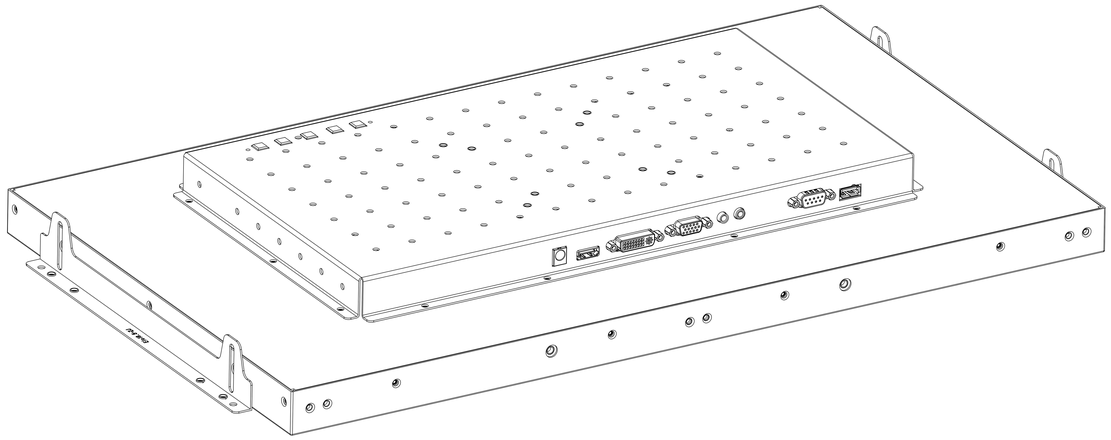21-Apr-2015 14:44:04 Create By Admin