16-Jul-2016 17:32:03 Create By Administra

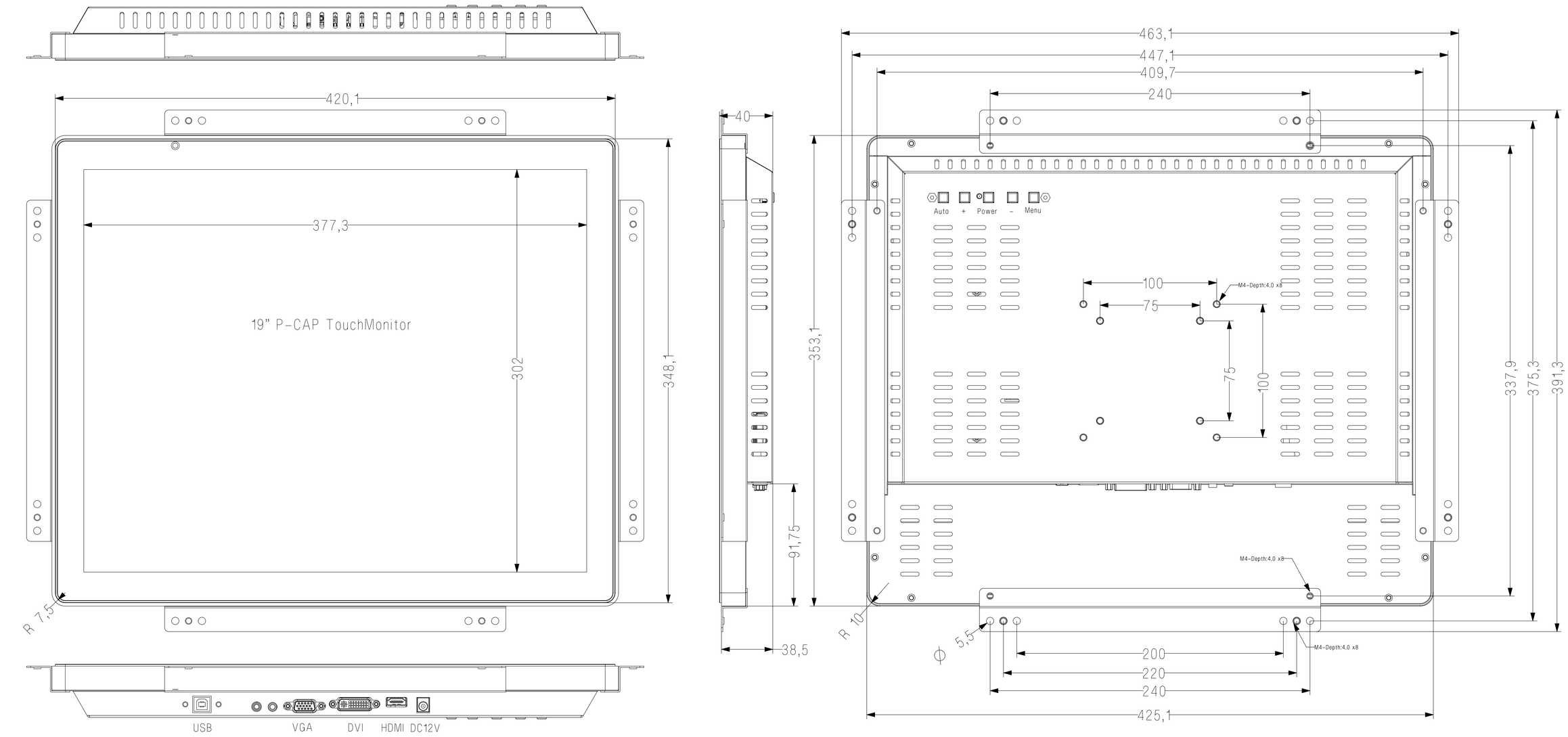

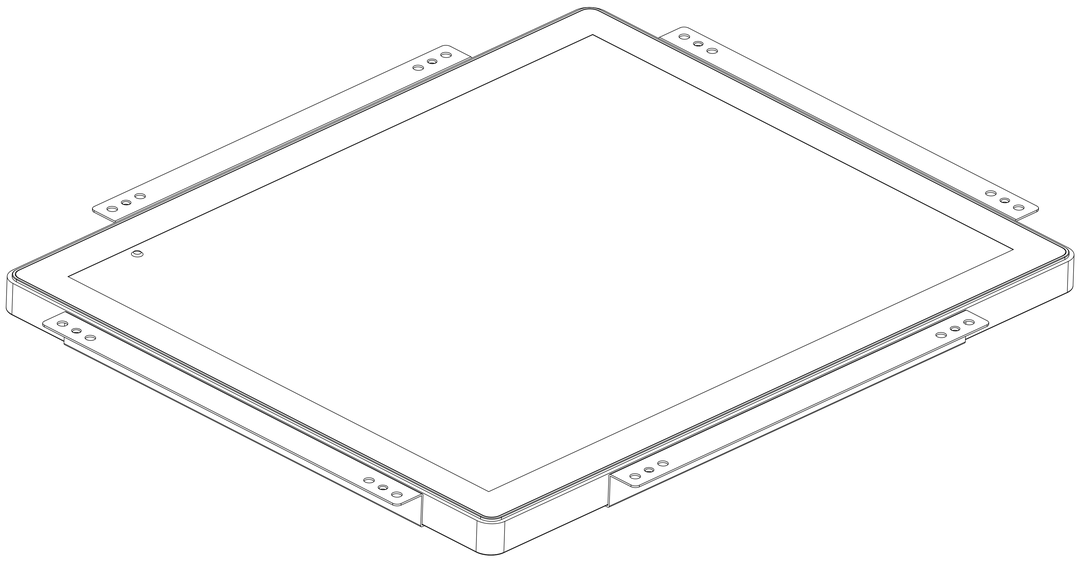

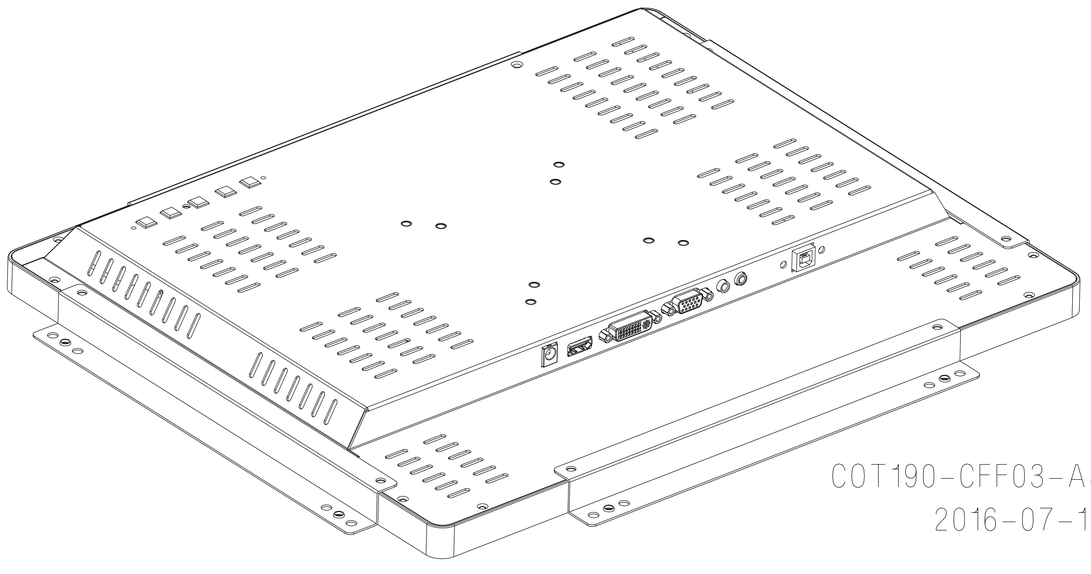

COT190-CFF03-ASM-D04
2016-07-15